W1/2 OF N1/2 OF S1/2 OF NW1/4 OF (AKA PARCEL "E").

NABINGER RICHARD H II
235 SW CARPENTER RD
LAKE CITY, FL 32024

2026

17-5S-16-03637-005

COLUMBIA COUNTY PROPERTY

BUILDING CHARACTERISTICS

ELEMENT	CD	CONSTRUCTION
Exterior Wall	32	HARDIE BRD 100
Roof Structur	08	IRREGULAR 100
Roof Cover	03	COMP SHNGL 100
Interior Wall	05	DRYWALL 100
Interior Floo	14	CARPET 60
Interior Floo	15	HARDTILE 40
Air Condition	03	CENTRAL 100
Heating Type	04	AIR DUCTED 100
Bedrooms		3 100
Bathrooms		2 100
Frame		N/A 100
Stories	1.	1. 100
Architectual	05	CONV 100
Units		0 100
Condition Adj	03	03 100
Kitchen Adjus	01	01 100
Quality	07	07
DOR CODE	0100	SINGLE FAMILY
MAP NUM		MKT AREA 02
NEIGHBORHOOD/LOC	17516.00	1.00/

AREA TYPE	TOTAL GROSS AREA	PCT OF BASE	YEAR	TOT ADJ AREA	SUBAREA MARKET VALUE
BAS	2,582	100		2,582	260,576
FGR	586	55		322	32,496
FOP	210	30		63	6,358
FSP	240	40		96	9,689
FUS	220	100		220	22,202
TOTALS	3,838			3,283	331,320

MARKET ADJUSTMENTS

TYPE	MDL	EFF. AREA	TOT ADJ PTS	EFF. BASE RATE	REPL. COST NEW	AYB	EYB	ECON	FNCT		NORM	% COND
0100	01	3,283	120.1442	134.56	441,760	2000	2000	0	0	0	25.00	75.00

1 SINGLE FAM 100% - 2003 Heated Area: 2802 HX Base Yr 2003

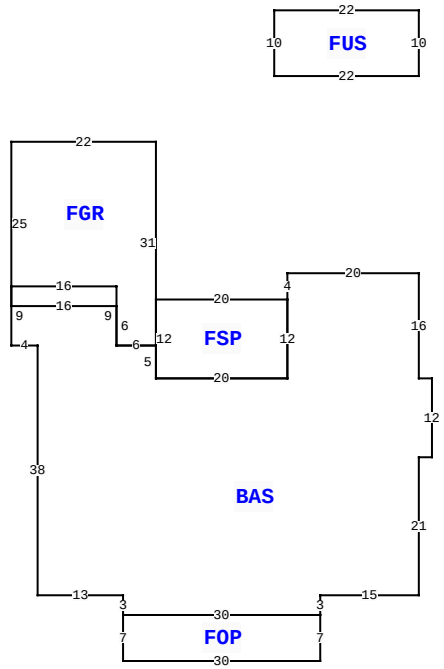

235 SW CARPENTER RD, LAKE CITY

BLD DATE		LGL DATE	
XF DATE		LAND DATE	05/10/2024 MLU
INC DATE		AG DATE	

VALUATION SUMMARY

VALUATION BY		STANDARD
Tax Group: 3	Tax Dist:	
BUILDING MARKET VALUE		331,320
TOTAL MARKET OB/XF VALUE		2,126
TOTAL LAND VALUE - MARKET		50,600
TOTAL MARKET VALUE		384,046
SOH/AGL Deduction		122,580
ASSESSED VALUE		261,466
TOTAL EXEMPTION VALUE	HX HB	50,722
BASE TAXABLE VALUE		210,744
TOTAL JUST VALUE		384,046
NCON VALUE		0
INCOME VALUE		
PREVIOUS YEAR MKT VALUE		388,464

PERMIT NUM	DESCRIPTION	AMT	ISSUED
15462	SFR	390	05/03/1999

SALES DATA

OFF RECORD Number	DATE	TYPE INST	Q U /	V I /	RSN CD	SALE PRICE
1217/2632	6/29/2011	WD	U	I	11	100
GRANTOR: STACY NABINGER						
GRANTEE: RICHARD II NABINGER						
0967/1125	11/08/2002	WD	Q	I		208,000
GRANTOR: JAMES & DIANA PARKER						
GRANTEE: RICHARD II & STACY						

BUILDING NOTES

BUILDING DIMENSIONS

BAS= W20 S4 FSP= W20 S12 E20 N12$ S12 W20 N5 FGR= N31 W22 S25 E16 S6 E6$ W6 N9 W16 S9 E4 S38 E13 S3 FOP= S7 E30 N7 W30$ E30 N3 E15 N21 E2 N12 W2 N16$ PTR= N30 FUS= N10 W22 S10 E22$ S30$.

EXTRA FEATURES

LN	OB/XF CODE	DESCRIPTION	BLD	CAP	L	W	UNITS	UT	Adj R	ADJ UNIT PRICE	ORIG COND	YEAR ON	YEAR ACTUAL	Q	% COND	OB/XF MKT VALUE	NOTES
1	0190	FPLC PF	0	100	0	0	1.00	UT	1,200.00	1,200.00	100	2000	2000	3	100	1,200	
2	0166	CONC,PAVMT	0	100	0	0	463.00	UT	2.00	2.00	100	2000	2000	3	100	926	

LAND DESCRIPTION

TOTAL OB/XF 2,126

LN	USE CODE	CLS	LAND USE DESCRIPTION	CAP	RD	LOC ZONE	FRONT	DEPTH	TOT LND UTS	UNIT TYPE	DT	DPTH FACT	% COND	TOT ADJ	UNIT PRICE	ADJ UNIT PRICE	LAND VALUE	OTHER ADJUSTMENTS AND NOTES	YEAR	DENSITY	DECL	FRZ	YR	CONSRV
1	0100	C	SFR	100		A-1	0.00	0.00	5.06	AC		1.00	1.00	1.00	10,000.00	10,000.00	50,600							

REVIEW DATE 10/14/2019 BY BC Total Acres: 5.06 Total Land Value: 50,600 Market: 0 Agricultural: 0 Common: 50,600 PRINTED 11/18/2025 BY SYS