LOT 1 BLOCK B MILL CREEK S/D & B
1, SE ALONG S LOT LINE 186.34 FT
TO NE COR LOT 2 BLOCK A, NW ALON

HULL WESTON HARRY JR/HULL IRENE
202 SE MILL CREEK CT
LAKE CITY, FL 32025

2026

17-4S-17-08397-111

COLUMBIA COUNTY PROPERTY

BUILDING CHARACTERISTICS

ELEMENT	CD	CONSTRUCTION
Exterior Wall	19	COMMON BRK 90
Exterior Wall	31	VINYL SID 10
Roof Structur	03	GABLE/HIP 100
Roof Cover	03	COMP SHNGL 100
Interior Wall	05	DRYWALL 100
Interior Floo	14	CARPET 70
Interior Floo	15	HARDTILE 30
Air Condition	03	CENTRAL 100
Heating Type	04	AIR DUCTED 100
Bedrooms		3 100
Bathrooms		2 100
Frame	01	NONE 100
Stories	1.	1. 100
Architectual	05	CONV 100
Units		0 100
Condition Adj	03	03 100
Kitchen Adjus	01	01 100
Quality	06	06
DOR CODE	0100	SINGLE FAMILY
MAP NUM		MKT AREA 06
NEIGHBORHOOD/LOC	17417.010	1.00/

AREA TYPE	TOTAL GROSS AREA	PCT OF BASE	YEAR	TOT ADJ AREA	SUBAREA MARKET VALUE
BAS	1,990	100		1,990	183,715
FGR	552	55		304	28,065
FOP	60	30		18	1,662
FOP	360	30		108	9,971
UDG	1,520	55		836	77,179
TOTALS	4,482			3,256	300,592

MARKET ADJUSTMENTS

TYPE	MDL	EFF. AREA	TOT ADJ PTS	EFF. BASE RATE	REPL. COST NEW	AYB	EYB	ECON	FNCT		NORM	% COND
0100	01	3,256	115.6102	129.48	421,587	1997	1997	0	0	0	28.70	71.30

1 SINGLE FAM 0% - 2024 Heated Area: 1990 HX Base Yr

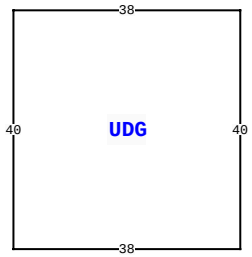

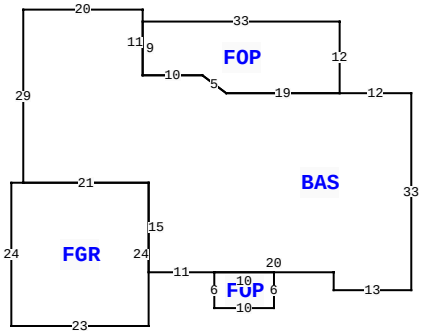

202 SE MILL CREEK CT, LAKE CITY

BLD DATE		LGL DATE	
XF DATE		LAND DATE	04/21/2023 MLU
INC DATE		AG DATE	

VALUATION SUMMARY

VALUATION BY		STANDARD
Tax Group: 2	Tax Dist:	
BUILDING MARKET VALUE		300,592
TOTAL MARKET OB/XF VALUE		4,082
TOTAL LAND VALUE - MARKET		18,500
TOTAL MARKET VALUE		323,174
SOH/AGL Deduction		0
ASSESSED VALUE		323,174
TOTAL EXEMPTION VALUE	MH	0
BASE TAXABLE VALUE		323,174
TOTAL JUST VALUE		323,174
NCON VALUE		0
INCOME VALUE		
PREVIOUS YEAR MKT VALUE		327,474

SALE:2:1: LOT 3

SALE:1:1: LOT 1 BLOCK B

PERMIT NUM	DESCRIPTION	AMT	ISSUED
000041834	Roof Replacement	13,520	04/30/2021
22576	GARAGE	120	12/09/2004
12456	SFR	230	04/28/1997

SALES DATA

OFF RECORD Number	DATE	TYPE INST	Q U	V I	RSN CD	SALE PRICE
1493/458	6/06/2023	WD	Q	I	01	340,000
GRANTOR: HERBERT NATHAN M						
GRANTEE: HULL WESTON HARRY J						
1344/2186	8/20/2017	WD	Q	I	01	248,500
GRANTOR: KAY E CEMBRUCH F/K/A						
GRANTEE: NATHAN M & GRACE M						

BUILDING NOTES

BUILDING DIMENSIONS

BAS= W12 FOP= N12 W33 S9 E10 R4 D3 E19$ W19 U3 L4 W10 N11 W20 S29 FGR= W2 S24 E23 N24 W21$ E21 S15 E11 FOP= S6 E10 N6 W10$ E20 S3 E13 N33$ PTR= N30 UDG= N40 W38 S40 E38$ S30$.

EXTRA FEATURES

LN	OB/XF CODE	DESCRIPTION	BLD	CAP	L	W	UNITS	UT	Adj R	ADJ UNIT PRICE	ORIG COND	YEAR ON	YEAR ACTUAL	Q	% COND	OB/XF MKT VALUE	NOTES
1	0166	CONC,PAVMT	0	0	0	0	1,741.00	UT	2.00	2.00	100	1997	1997	3	100	3,482	
2	0120	CLFENCE 4	0	0	0	0	1.00	UT	0.00	0.00	100	1997	1997	3	100	600	

LAND DESCRIPTION

TOTAL OB/XF 4,082

LN	USE CODE	CLS	LAND USE DESCRIPTION	CAP	RD	LOC ZONE	FRONT	DEPTH	TOT LND UTS	UNIT TYPE	DT	DPTH FACT	% COND	TOT ADJ	UNIT PRICE	ADJ UNIT PRICE	LAND VALUE	OTHER ADJUSTMENTS AND NOTES	YEAR	DENSITY	DECL	FRZ	YR	CONSRV
1	0100	C	SFR	0		00	0.00	0.00	1.00	LT		1.00	1.00	1.00	18,500.00	18,500.00	18,500							

REVIEW DATE 10/10/2023 BY TP Total Acres: 0.72 Total Land Value: 18,500 Market: 0 Agricultural: 0 Common: 18,500 PRINTED 11/10/2025 BY SYS