LOT 6 BLACKBERRY FARMS S/D.
982-152, CT 1326-666, WD 1337-1228,

PERRY KATHNEICELA
703 NW BLACKBERRY CIR
LAKE CITY, FL 32055

2026

17-3S-16-02168-106

COLUMBIA COUNTY PROPERTY

BUILDING CHARACTERISTICS

ELEMENT	CD	CONSTRUCTION
Exterior Wall	19	COMMON BRK 60
Exterior Wall	10	ABOVE AVG. 40
Roof Structur	08	IRREGULAR 100
Roof Cover	14	PREFIN MT 100
Interior Wall	05	DRYWALL 100
Interior Floo	12	HARDWOOD 60
Interior Floo	14	CARPET 40
Air Condition	03	CENTRAL 100
Heating Type	04	AIR DUCTED 100
Bedrooms		4 100
Bathrooms		3.5 100
Frame	02	WOOD FRAME 100
Stories	1.5	1.5 100
Architectual	05	CONV 100
Units		0 100
Condition Adj	03	03 100
Kitchen Adjus	01	01 100
Quality	07	07
DOR CODE	0100	SINGLE FAMILY
MAP NUM		MKT AREA 01
NEIGHBORHOOD/LOC	17316.00	1.00/

AREA TYPE	TOTAL GROSS AREA	PCT OF BASE	YEAR	TOT ADJ AREA	SUBAREA MARKET VALUE
BAS	2,455	100		2,455	303,718
FGR	867	55		477	59,011
FHS	881	60		529	65,444
FOP	280	30		84	10,392
FOP	340	30		102	12,619
UOP	714	20		143	17,691
TOTALS	5,537			3,790	468,876

MARKET ADJUSTMENTS

TYPE	MDL	EFF. AREA	TOT ADJ PTS	EFF. BASE RATE	REPL. COST NEW	AYB	EYB	ECON	FNCT		NORM	% COND
0100	01	3,790	139.8197	156.60	593,514	2004	2004	0	0	0	21.00	79.00

1 SINGLE FAM 100% - 2018 Heated Area: 3336 HX Base Yr 2018

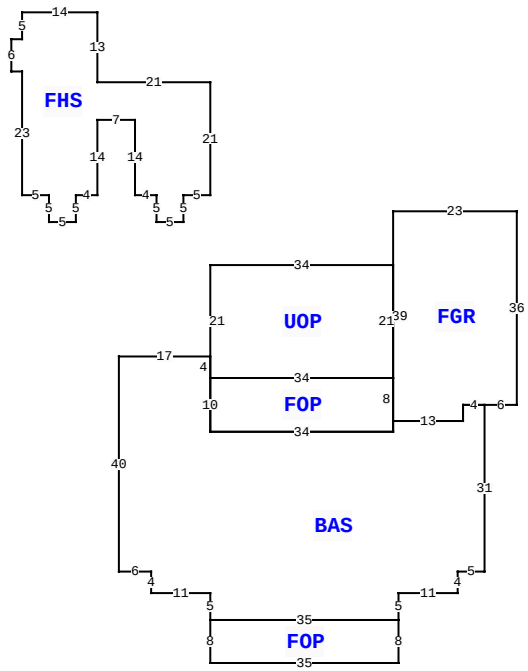

703 NW BLACKBERRY CIR, LAKE CITY

BLD DATE		LGL DATE	
XF DATE		LAND DATE	04/07/2025 MLU
INC DATE		AG DATE	

VALUATION SUMMARY

VALUATION BY		STANDARD
Tax Group: 3	Tax Dist:	
BUILDING MARKET VALUE		468,876
TOTAL MARKET OB/XF VALUE		8,708
TOTAL LAND VALUE - MARKET		48,400
TOTAL MARKET VALUE		525,984
SOH/AGL Deduction		146,787
ASSESSED VALUE		379,197
TOTAL EXEMPTION VALUE	HX HB	50,722
BASE TAXABLE VALUE		328,475
TOTAL JUST VALUE		525,984
NCON VALUE		0
INCOME VALUE		
PREVIOUS YEAR MKT VALUE		531,919

PERMIT NUM	DESCRIPTION	AMT	ISSUED
37192	MAINT/ALTR	0	09/10/2018
20728	SFR	546	05/20/2003

SALES DATA

OFF RECORD Number	DATE	TYPE INST	Q U	V I	RSN CD	SALE PRICE
1337/1228	5/22/2017	WD	U	I	12	304,000
GRANTOR: FEDERAL NATIONAL MORT						
GRANTEE: KATHNEICELA PERRY						
1326/0666	11/03/2016	CT	U	I	18	0
GRANTOR: ROBERT R & MARGARET L						
GRANTEE: FEDERAL NATIONAL MO						

BUILDING NOTES

BUILDING DIMENSIONS

BAS= W17 S40 E6 S4 E11 S5 FOP= S8 E35 N8 W35$ E35 N5 E11 N4 E5 N31 FGR= E6 N36 W23 S39 E13 N3 E4$ W4 S3 W13 FOP= N8 W34 S10 E34 N2$ S2 W34 N10 UOP= E34 N21 W34 S21$ N4$ PTR= N30 FHS= N21 W21 N13 W14 S5 W2 S6 E2 S23 E5 S5 E5 N5 E4 N14 E7 S14 E4 S5 E5 N5 E5 $ S30$.

EXTRA FEATURES

LN	OB/XF CODE	DESCRIPTION	BLD	CAP	L	W	UNITS	UT	Adj R	ADJ UNIT PRICE	ORIG COND	YEAR ON	YEAR ACTUAL	Q	% COND	OB/XF MKT VALUE	NOTES
1	0190	FPLC PF	0	100	0	0	1.00	UT	1,200.00	1,200.00	100	2004	2004	3	100	1,200	
2	0260	PAVEMENT-A	0	100	0	0	5,916.00	UT	1.10	1.10	100	2004	2004	3	100	6,508	
3	0169	FENCE/WOOD	0	100	0	0	1.00	UT	0.00	0.00	100	2005	2005	3	100	1,000	

LAND DESCRIPTION

TOTAL OB/XF 8,708

LN	USE CODE	CLS	LAND USE DESCRIPTION	CAP	RD	LOC ZONE	FRONT	DEPTH	TOT LND UTS	UNIT TYPE	DT	DPTH FACT	% COND	TOT ADJ	UNIT PRICE	ADJ UNIT PRICE	LAND VALUE	OTHER ADJUSTMENTS AND NOTES	YEAR	DENSITY	DECL	FRZ	YR	CONSRV
1	0100	C	SFR	100		A-1	0.00	0.00	4.40	AC		1.00	1.00	1.00	11,000.00	11,000.00	48,400							

REVIEW DATE 01/31/2023 BY KS Total Acres: 4.40 Total Land Value: 48,400 Market: 0 Agricultural: 0 Common: 48,400 PRINTED 11/17/2025 BY SYS