LOT 2 BLACKBERRY FARMS S/D.
ORB 973-1465, WD 1007-1847.
WD 1122-1806

MEDINA RAUL E/RODRIGUEZ JESSICA
457 NW BLACKBERRY CIR
LAKE CITY, FL 32055

2026

17-3S-16-02168-102

COLUMBIA COUNTY PROPERTY

BUILDING CHARACTERISTICS

ELEMENT	CD	CONSTRUCTION
Exterior Wall	31	VINYL SID 100
Roof Structur	08	IRREGULAR 100
Roof Cover	12	MODULAR MT 100
Interior Wall	05	DRYWALL 100
Interior Floo	14	CARPET 70
Interior Floo	15	HARDTILE 30
Air Condition	03	CENTRAL 100
Heating Type	04	AIR DUCTED 100
Bedrooms		4 100
Bathrooms		3 100
Frame	02	WOOD FRAME 100
Stories	1.	1. 100
Architectual	05	CONV 100
Units		0 100
Condition Adj	03	03 100
Kitchen Adjus	01	01 100
Quality	07	07
DOR CODE	0100	SINGLE FAMILY
MAP NUM		MKT AREA 01
NEIGHBORHOOD/LOC	17316.00	1.00/

AREA TYPE	TOTAL GROSS AREA	PCT OF BASE	YEAR	TOT ADJ AREA	SUBAREA MARKET VALUE
BAS	1,962	100		1,962	200,073
FGR	576	55		317	32,326
FOP	176	30		53	5,404
FSP	378	40		151	15,398
FUS	690	100		690	70,362
TOTALS	3,782			3,173	323,564

MARKET ADJUSTMENTS

TYPE	MDL	EFF. AREA	TOT ADJ PTS	EFF. BASE RATE	REPL. COST NEW	AYB	EYB	ECON	FNCT		NORM	% COND
0100	01	3,173	123.4519	138.27	438,731	2004	2004	0	0	0	26.25	73.75

1 SINGLE FAM 100% - 2008 Heated Area: 2652 HX Base Yr 2008

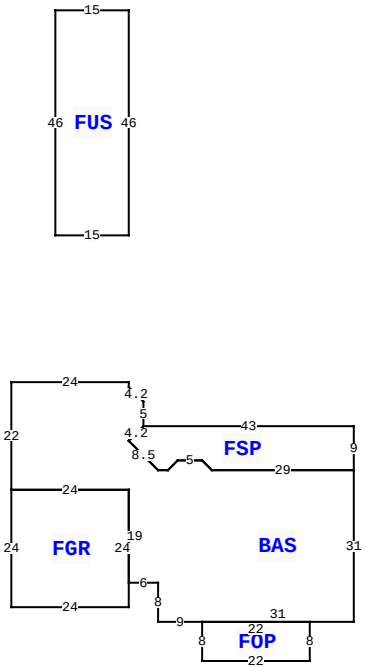

457 NW BLACKBERRY CIR, LAKE CITY

BLD DATE		LGL DATE	
XF DATE		LAND DATE	04/13/2022 MLU
INC DATE		AG DATE	

VALUATION SUMMARY

VALUATION BY		STANDARD
Tax Group: 3	Tax Dist:	
BUILDING MARKET VALUE		323,564
TOTAL MARKET OB/XF VALUE		4,500
TOTAL LAND VALUE - MARKET		36,300
TOTAL MARKET VALUE		364,364
SOH/AGL Deduction		107,413
ASSESSED VALUE		256,951
TOTAL EXEMPTION VALUE	HX HB	50,722
BASE TAXABLE VALUE		206,229
TOTAL JUST VALUE		364,364
NCON VALUE		0
INCOME VALUE		
PREVIOUS YEAR MKT VALUE		369,848

PERMIT NUM	DESCRIPTION	AMT	ISSUED
000041875	Roof Replacement	25,174	05/10/2021
21685	SFR	597	04/02/2004

SALES DATA

OFF RECORD Number	DATE	TYPE INST	Q U	V I	RSN CD	SALE PRICE
1122/1806	6/21/2007	WD	Q	I		325,000
GRANTOR: R BRIAN & ZANDRA VICK						
GRANTEE: RAUL E MEDINA & JES						
1007/1847	2/18/2004	WD	Q	V		38,500
GRANTOR: MARVIN &* JENNIFER VI						
GRANTEE: R BRIAN & ZANDRA N						

BUILDING NOTES

BUILDING DIMENSIONS

BAS= W24 S22 FGR= S24 E24 N24 W24$ E24 S19 E6 S8 E9 FOP= S8 E22 N8 W22$ E31 N31 FSP= N9 W43 L3 D3 D6 R6 E2 R2 U2 E5 D2 R2 E29$ W29 L2 U2 W5 D2 L2 W2 L6 U6 U3 R3 N5 L3 U3 N1$ PTR= N30 FUS= N46 W15 S46 E15$ S30$.

EXTRA FEATURES

LN	OB/XF CODE	DESCRIPTION	BLD	CAP	L	W	UNITS	UT	Adj R	ADJ UNIT PRICE	ORIG COND	YEAR ON	YEAR ACTUAL	Q	% COND	OB/XF MKT VALUE	NOTES
1	0190	FPLC PF	0	100	0	0	1.00	UT	1,200.00	1,200.00	100	2004	2004	3	100	1,200	
2	0166	CONC,PAVMT	0	100	0	0	1.00	UT	0.00	0.00	100	2005	2005	3	100	2,500	
3	0169	FENCE/WOOD	0	100	0	0	1.00	UT	800.00	800.00	100	2023	2022		100	800	

LAND DESCRIPTION

TOTAL OB/XF 4,500

LN	USE CODE	CLS	LAND USE DESCRIPTION	CAP	RD	LOC ZONE	FRONT	DEPTH	TOT LND UTS	UNIT TYPE	DT	DPTH FACT	% COND	TOT ADJ	UNIT PRICE	ADJ UNIT PRICE	LAND VALUE	OTHER ADJUSTMENTS AND NOTES	YEAR	DENSITY	DECL	FRZ	YR	CONSRV
1	0100	C	SFR	100		A-1	0.00	0.00	3.63	AC		1.00	1.00	1.00	10,000.00	10,000.00	36,300							

REVIEW DATE 01/31/2023 BY KS Total Acres: 3.63 Total Land Value: 36,300 Market: 0 Agricultural: 0 Common: 36,300 PRINTED 11/17/2025 BY SYS