COMM SE COR OF SEC, THEN RUN 666 FT TO POB; N 13 DEG E 905.27 FT, M/L TO TOP OF THE BANK OF CREEK,

PELLETIER YOEL/VASQUEZ REINA
8575 N US HIGHWAY 441
LAKE CITY, FL 32055

2026

17-2S-17-04726-002

COLUMBIA COUNTY PROPERTY

BUILDING CHARACTERISTICS

ELEMENT	CD	CONSTRUCTION
Exterior Wall	16	WD FR STUC 100
Roof Structur	08	IRREGULAR 100
Roof Cover	14	PREFIN MT 100
Interior Wall	05	DRYWALL 100
Interior Floo	15	HARDTILE 70
Interior Floo	12	HARDWOOD 30
Air Condition	03	CENTRAL 100
Heating Type	04	AIR DUCTED 100
Bedrooms		3 100
Bathrooms		2 100
Frame	02	WOOD FRAME 100
Stories	1.	1. 100
Architectual	05	CONV 100
Units		0 100
Condition Adj	03	03 100
Kitchen Adjus	01	01 100
Quality	07	07
DOR CODE	0100	SINGLE FAMILY
MAP NUM		MKT AREA 03
NEIGHBORHOOD/LOC	17217.00	1.00/

AREA TYPE	TOTAL GROSS AREA	PCT OF BASE	YEAR	TOT ADJ AREA	SUBAREA MARKET VALUE
BAS	3,152	100		3,152	318,665
FCP	720	25		180	18,198
FGR	900	55		495	50,044
FOP	128	30		38	3,841
FSP	551	40		220	22,242
FSP	864	40		346	34,980
PTO	64	5		3	303
UDU	432	55		238	24,061
TOTALS	6,811			4,672	472,335

MARKET ADJUSTMENTS

TYPE	MDL	EFF. AREA	TOT ADJ PTS	EFF. BASE RATE	REPL. COST NEW	AYB	EYB	ECON	FNCT		NORM	% COND
0100	01	4,672	131.7745	147.59	689,540	2004	2004	0	0	0	31.50	68.50

1 SINGLE FAM 100% - 2025 Heated Area: 3152 HX Base Yr 2025

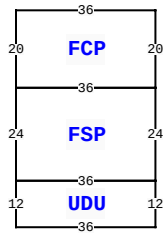

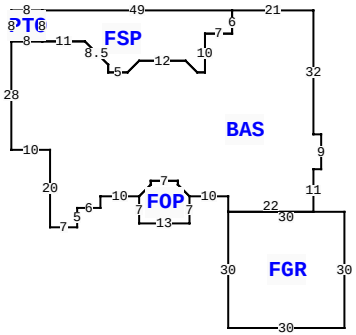

8575 N US HIGHWAY 441 , LAKE CITY

BLD DATE		LGL DATE	
XF DATE		LAND DATE	04/11/2025 MLU
INC DATE		AG DATE	

VALUATION SUMMARY

VALUATION BY		STANDARD
Tax Group: 3	Tax Dist:	
BUILDING MARKET VALUE		472,335
TOTAL MARKET OB/XF VALUE		9,375
TOTAL LAND VALUE - MARKET		69,095
TOTAL MARKET VALUE		550,805
SOH/AGL Deduction		150,369
ASSESSED VALUE		400,436
TOTAL EXEMPTION VALUE	HX HB	50,722
BASE TAXABLE VALUE		349,714
TOTAL JUST VALUE		550,805
NCON VALUE		0
INCOME VALUE		
PREVIOUS YEAR MKT VALUE		561,148

PERMIT NUM	DESCRIPTION	AMT	ISSUED
20873	SFR	573	07/16/2003

SALES DATA

OFF RECORD Number	DATE	TYPE INST	Q U	V I	RSN CD	SALE PRICE
1351/2669	1/19/2018	WD	U	I	37	425,000

GRANTOR: EUGENE MICHAEL & PATT

GRANTEE: YOEL PELLETIER & RE

BUILDING NOTES

BUILDING DIMENSIONS

BAS= W21 FSP= W49 S8 E11 D6 R6 S2 E5 R3 U3 E12 D3 R3 E2 N10 E7 N6$ S6 W7 S10 W2 L3 U3 W12 D3 L3 W5 N2 L6 U6 W11 PTO= N8 W8 S8 E8$ W8 S28 E10 S20 E7 N5 E6 N3 E10 FOP= S7 E13 N7 U3 L3 N1 W7 S1 L3 D3 $ U3 R3 N1 E7 S1 R3 D3 E10 S4 FGR= S30 E30 N30 W30$ E22 N11 E2 N9 W2 N32$ PTR= N30 UDU= N12 FSP= N24 FCP= N20 W36 S20 E36$ W36 S24 E36$ W36 S12 E36$ S30$.

EXTRA FEATURES

LN	OB/XF CODE	DESCRIPTION	BLD	CAP	L	W	UNITS	UT	Adj R	ADJ UNIT PRICE	ORIG COND	YEAR ON	YEAR ACTUAL	Q	% COND	OB/XF MKT VALUE	NOTES
1	0166	CONC,PAVMT	0	100	0	0	3,650.00	UT	2.00	2.00	100	2004	2004	3	100	7,300	
2	0119	MASONRY WA	0	100	5	49	245.00	UT	5.00	5.00	100	2004	2004	3	100	1,225	
3	0294	SHED WOOD/	0	100	0	0	1.00	UT	0.00	0.00	100	2010	2010	3	100	300	
4	0120	CLFENCE 4	0	100	0	0	220.00	UT	2.50	2.50	100	2004	2004	3	100	550	

LAND DESCRIPTION

TOTAL OB/XF 9,375

LN	USE CODE	CLS	LAND USE DESCRIPTION	CAP	RD	LOC ZONE	FRONT	DEPTH	TOT LND UTS	UNIT TYPE	DT	DPTH FACT	% COND	TOT ADJ	UNIT PRICE	ADJ UNIT PRICE	LAND VALUE	OTHER ADJUSTMENTS AND NOTES	YEAR	DENSITY	DECL	FRZ	YR	CONSRV
1	0100	C	SFR	100			0.00	0.00	1.00	AC		1.00	1.00	1.00	6,500.00	6,500.00	6,500							
2	9900	C	AC NON-AG	100		A-1	0.00	0.00	9.63	AC		1.00	1.00	1.00	6,500.00	6,500.00	62,595							

REVIEW DATE 02/19/2018 BY DF Total Acres: 10.63 Total Land Value: 69,095 Market: 0 Agricultural: 0 Common: 69,095 PRINTED 11/18/2025 BY SYS