LOT 33 RIVER RISE S/D UNIT 2.
WD 1079-160, WD 1129-2250, DC 13

BOUSQUET MARILYN J
1159 SW MARYNIK DR
HIGH SPRINGS, FL 32643

2026

16-7S-17-10006-233

COLUMBIA COUNTY PROPERTY

BUILDING CHARACTERISTICS

ELEMENT	CD	CONSTRUCTION
Exterior Wall	32	HARDIE BRD 100
Roof Structur	08	IRREGULAR 100
Roof Cover	03	COMP SHNGL 100
Interior Wall	05	DRYWALL 100
Interior Floo	13	LAM/VNLPLK 80
Interior Floo	15	HARDTILE 20
Air Condition	03	CENTRAL 100
Heating Type	04	AIR DUCTED 100
Bedrooms		3 100
Bathrooms		2 100
Frame	02	WOOD FRAME 100
Stories	1.	1. 100
Units		0 100
Quality	07	07

DOR CODE 0100 SINGLE FAMILY
MAP NUM | MKT AREA 02
NEIGHBORHOOD/LOC 16717.020 1.00/

AREA TYPE	TOTAL GROSS AREA	PCT OF BASE	YEAR	TOT ADJ AREA	SUBAREA MARKET VALUE
BAS	2,087	100		2,087	266,704
FGR	630	55		346	44,217
FOP	180	30		54	6,901
FOP	186	30		56	7,156
FUS	299	100		299	38,210
TOTALS	3,382			2,842	363,188

MARKET ADJUSTMENTS

TYPE	MDL	EFF. AREA	TOT ADJ PTS	EFF. BASE RATE	REPL. COST NEW	AYB	EYB	ECON	FNCT		NORM	% COND
0100	01	2,842	121.3828	135.95	386,370	2019	2019	0	0	0	6.00	94.00

1 SINGLE FAM 100% - 2020 Heated Area: 2386 HX Base Yr 2020

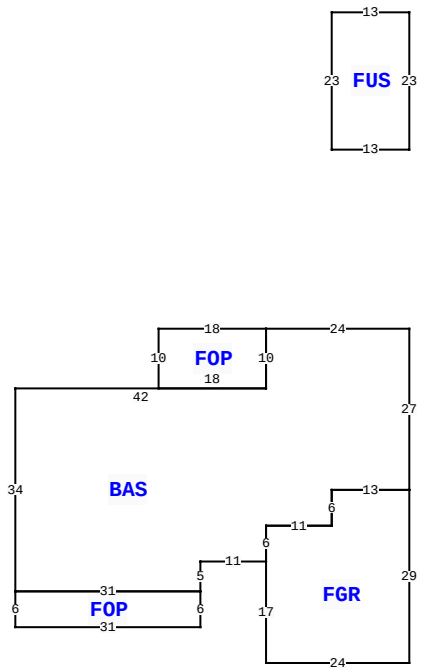

1159 SW MARYNIK DR, HIGH SPRINGS

BLD DATE		LGL DATE	
XF DATE		LAND DATE	05/15/2024 MLU
INC DATE		AG DATE	

VALUATION SUMMARY

VALUATION BY		STANDARD
Tax Group: 3	Tax Dist:	
BUILDING MARKET VALUE		363,188
TOTAL MARKET OB/XF VALUE		48,451
TOTAL LAND VALUE - MARKET		70,000
TOTAL MARKET VALUE		481,639
SOH/AGL Deduction		156,105
ASSESSED VALUE		325,534
TOTAL EXEMPTION VALUE	HX HB	50,722
BASE TAXABLE VALUE		274,812
TOTAL JUST VALUE		481,639
NCON VALUE		0
INCOME VALUE		
PREVIOUS YEAR MKT VALUE		487,228

PERMIT NUM	DESCRIPTION	AMT	ISSUED
000042346	Screen Enclosure	10,500	07/16/2021
000041782	Swimming Pool and	53,000	04/22/2021

SALES DATA

OFF RECORD Number	DATE	TYPE INST	Q U	V I	RSN CD	SALE PRICE
1354/1236	2/22/2018	WD	Q	V	01	100,000
GRANTOR: NEVIN G SUMMERS						
GRANTEE: WAYNE P & MARILYN B						
1129/2250	8/30/2007	WD	Q	V	03	120,000
GRANTOR: UNIVERSITY TOWING & T						
GRANTEE: NEVIN G SUMMERS						

BUILDING NOTES

BUILDING DIMENSIONS

BAS= W24 FOP= W18 S10 E18 N10$ S10 W42 S34 FOP= S6 E31 N6 W31$ E31 N5 E11 FGR= S17 E24 N29 W13 S6 W11 S6$ N6 E11 N6 E13 N27$ PTR= N30 FUS= N23 W13 S23 E13$ S30$.

EXTRA FEATURES

LN	OB/XF CODE	DESCRIPTION	BLD	CAP	L	W	UNITS	UT	Adj R	ADJ UNIT PRICE	ORIG COND	YEAR ON	YEAR ACTUAL	Q	% COND	OB/XF MKT VALUE	NOTES
1	0280	POOL R/CON	0	100	16	32	512.00	UT	70.00	70.00	100	2022	2021		93	33,331	
2	0282	POOL ENCL	0	100	28	48	1,344.00	UT	15.00	15.00	100	2022	2021		75	15,120	

LAND DESCRIPTION

TOTAL OB/XF 48,451

LN	USE CODE	CLS	LAND USE DESCRIPTION	CAP	RD	LOC ZONE	FRONT	DEPTH	TOT LND UTS	UNIT TYPE	DT	DPTH FACT	% COND	TOT ADJ	UNIT PRICE	ADJ UNIT PRICE	LAND VALUE	OTHER ADJUSTMENTS AND NOTES	YEAR	DENSITY	DECL	FRZ	YR	CONSRV
1	0100	C	SFR	100		A-3	0.00	0.00	1.00	LT		1.00	1.00	1.00	70,000.00	70,000.00	70,000							

REVIEW DATE 11/22/2021 BY HC Total Acres: 5.12 Total Land Value: 70,000 Market: 0 Agricultural: 0 Common: 70,000 PRINTED 11/20/2025 BY SYS