LOT 26 RIVER RISE S/D UNIT 2.
WD 1074-571,572, WD 1206-2552,
WD 1329-2204,

GREEN STEVEN JAMES/GREEN MICHELLE BROWNING
918 SW MARYNIK DR
HIGH SPRINGS, FL 32643

2026

16-7S-17-10006-226

COLUMBIA COUNTY PROPERTY

BUILDING CHARACTERISTICS

ELEMENT	CD	CONSTRUCTION
Exterior Wall	32	HARDIE BRD 100
Roof Structur	03	GABLE/HIP 100
Roof Cover	03	COMP SHNGL 100
Interior Wall	05	DRYWALL 100
Interior Floo	13	LAM/VNLPLK 50
Interior Floo	14	CARPET 50
Air Condition	03	CENTRAL 100
Heating Type	04	AIR DUCTED 100
Bedrooms		3 100
Bathrooms		2.5 100
Frame	02	WOOD FRAME 100
Stories	1.	1. 100
Architectual	05	CONV 100
Units		0 100
Quality	07	07

DOR CODE 0100 SINGLE FAMILY

MAP NUM | MKT AREA 02

NEIGHBORHOOD/LOC 16717.020 1.00/

AREA TYPE	TOTAL GROSS AREA	PCT OF BASE	YEAR	TOT ADJ AREA	SUBAREA MARKET VALUE
BAS	2,290	100		2,290	281,227
FGR	540	55		297	36,474
FOP	150	30		45	5,526
FOP	768	30		230	28,246
TOTALS	3,748			2,862	351,472

MARKET ADJUSTMENTS

TYPE	MDL	EFF. AREA	TOT ADJ PTS	EFF. BASE RATE	REPL. COST NEW	AYB	EYB	ECON	FNCT		NORM	% COND
0100	01	2,862	117.9035	132.05	377,927	2018	2018	0	0	0	7.00	93.00

1 SINGLE FAM 100% - 2019 Heated Area: 2290 HX Base Yr 2019

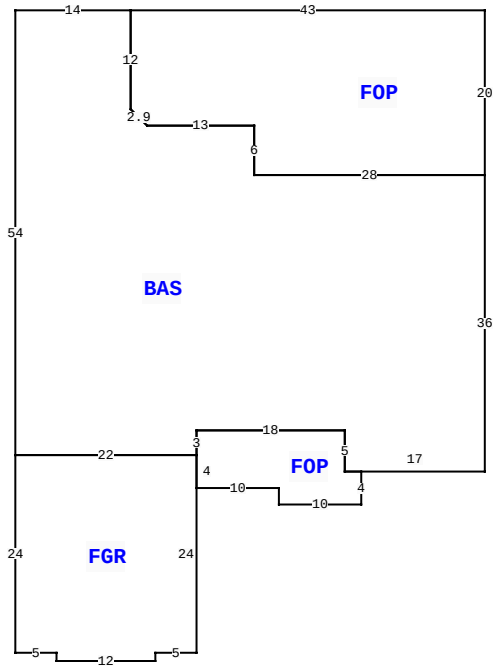

918 SW MARYNIK DR, HIGH SPRINGS

BLD DATE		LGL DATE	
XF DATE		LAND DATE	05/15/2024 MLU
INC DATE		AG DATE	

VALUATION SUMMARY

VALUATION BY		STANDARD
Tax Group: 3	Tax Dist:	
BUILDING MARKET VALUE		351,472
TOTAL MARKET OB/XF VALUE		48,227
TOTAL LAND VALUE - MARKET		80,500
TOTAL MARKET VALUE		480,199
SOH/AGL Deduction		125,385
ASSESSED VALUE		354,814
TOTAL EXEMPTION VALUE	HX HB	50,722
BASE TAXABLE VALUE		304,092
TOTAL JUST VALUE		480,199
NCON VALUE		0
INCOME VALUE		
PREVIOUS YEAR MKT VALUE		486,006

PERMIT NUM	DESCRIPTION	AMT	ISSUED
36336	POOL	0	02/15/2018
36088	POOL	363	12/13/2017
35783	SFR	1,185	09/15/2017

SALES DATA

OFF RECORD Number	DATE	TYPE INST	Q U	V I	RSN CD	SALE PRICE
1329/2204	1/24/2017	WD	Q	V	01	65,000
GRANTOR: CHERYL WEDGWOOD						
GRANTEE: STEVEN JAMES & MICH						
1206/2552	12/17/2010	WD	Q	V	01	57,900
GRANTOR: REGINA E QUICK						
GRANTEE: CHERYL WEDGWOOD						

BUILDING NOTES

BUILDING DIMENSIONS

BAS= W14 S54 FGR= S24 E5 S1 E12 N1 E5 N24 W22$ E22 FOP= S4 E10 S2 E10 N4 W2 N5 W18 S3$ N3 E18 S5 E17 N36 FOP= N20 W43 S12 D2 R2 E13 S6 E28$ W28 N6 W13 L2 U2 N12$.

EXTRA FEATURES

LN	OB/XF CODE	DESCRIPTION	BLD	CAP	L	W	UNITS	UT	Adj R	ADJ UNIT PRICE	ORIG COND	YEAR ON	YEAR ACTUAL	Q	% COND	OB/XF MKT VALUE	NOTES
1	0280	POOL R/CON	0	100	16	32	512.00	UT	70.00	70.00	100	2018	2018	3	86	30,822	
2	0282	POOL ENCL	0	100	27	47	1,269.00	UT	15.00	15.00	100	2018	2018	3	60	11,421	
3	0166	CONC,PAVMT	0	100	0	0	2,992.00	UT	2.00	2.00	100	2018	2018	3	100	5,984	

LAND DESCRIPTION

TOTAL OB/XF 48,227

LN	USE CODE	CLS	LAND USE DESCRIPTION	CAP	RD	LOC ZONE	FRONT	DEPTH	TOT LND UTS	UNIT TYPE	DT	DPTH FACT	% COND	TOT ADJ	UNIT PRICE	ADJ UNIT PRICE	LAND VALUE	OTHER ADJUSTMENTS AND NOTES	YEAR	DENSITY	DECL	FRZ	YR	CONSRV
1	0100	C	SFR	100		A-3	0.00	0.00	1.00	LT		1.00	1.00	1.15	70,000.00	80,500.00	80,500							

REVIEW DATE 01/30/2019 BY JH Total Acres: 5.02 Total Land Value: 80,500 Market: 0 Agricultural: 0 Common: 80,500 PRINTED 11/19/2025 BY SYS