LOT 19 RIVER RISE S/D UNIT 1.
WD 1081-774, WD 1346-2553, WD 14

CHALKLEY MARK E/CHALKLEY TERESA G
147 SW GREY WAY
HIGH SPRINGS, FL 32643

2026

16-7S-17-10006-219

COLUMBIA COUNTY PROPERTY

BUILDING CHARACTERISTICS

ELEMENT	CD	CONSTRUCTION
Exterior Wall	32	HARDIE BRD 100
Roof Structur	08	IRREGULAR 100
Roof Cover	03	COMP SHNGL 100
Interior Wall	05	DRYWALL 100
Interior Floo	13	LAM/VNLPLK 50
Interior Floo	15	HARDTILE 50
Air Condition	03	CENTRAL 100
Heating Type	04	AIR DUCTED 100
Bedrooms		3 100
Bathrooms		2 100
Frame	02	WOOD FRAME 100
Stories	1.	1. 100
Architectual	05	CONV 100
Units		0 100
Condition Adj	04	04 100
Quality	07	07

DOR CODE	0100	SINGLE FAMILY	
MAP NUM		MKT AREA	02
NEIGHBORHOOD/LOC	16717.020	1.00/	

AREA TYPE	TOTAL GROSS AREA	PCT OF BASE	YEAR	TOT ADJ AREA	SUBAREA MARKET VALUE
BAS	2,013	100		2,013	285,475
FCP	666	25	2025	166	23,541
FGR	528	55		290	41,126
FGR	777	55	2025	427	60,555
FOP	192	30		58	8,225
FOP	210	30	2025	63	8,935
FSP	266	40		106	15,033
TOTALS	4,652			3,123	442,890

MARKET ADJUSTMENTS

TYPE	MDL	EFF. AREA	TOT ADJ PTS	EFF. BASE RATE	REPL. COST NEW	AYB	EYB	ECON	FNCT		NORM	% COND
0100	01	3,123	136.1492	152.49	476,226	2018	2018	0	0	0	7.00	93.00

1 SINGLE FAM 100% - 2022 Heated Area: 2013 HX Base Yr 2022

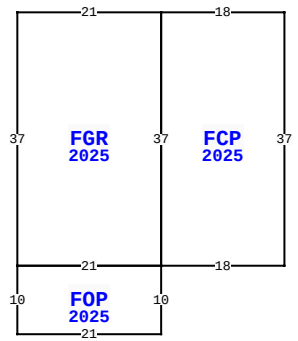

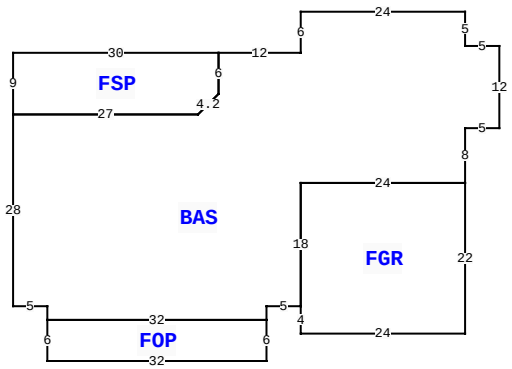

147 SW GREY WAY, HIGH SPRINGS

BLD DATE		LGL DATE	
XF DATE		LAND DATE	05/15/2024 MLU
INC DATE		AG DATE	

VALUATION SUMMARY

VALUATION BY		STANDARD
Tax Group: 3	Tax Dist:	
BUILDING MARKET VALUE		442,890
TOTAL MARKET OB/XF VALUE		1,454
TOTAL LAND VALUE - MARKET		70,000
TOTAL MARKET VALUE		514,344
SOH/AGL Deduction		151,285
ASSESSED VALUE		363,059
TOTAL EXEMPTION VALUE	HX HB	50,722
BASE TAXABLE VALUE		312,337
TOTAL JUST VALUE		514,344
NCON VALUE		0
INCOME VALUE		
PREVIOUS YEAR MKT VALUE		519,106

PERMIT NUM	DESCRIPTION	AMT	ISSUED
000045888	Storage Building	85,000	11/09/2022
36103	SFR	1,074	12/15/2017

SALES DATA

OFF RECORD Number	DATE	TYPE INST	Q U	V I	RSN CD	SALE PRICE
1448/2606	10/01/2021	WD	Q	I	01	421,400
GRANTOR: HANDTKE PHILIP						
GRANTEE: CHALKLEY MARK E						
1346/2553	10/24/2017	WD	Q	V	01	39,000
GRANTOR: LEONARD JR,CAROL A &						
GRANTEE: PHILIP & RENEE HAND						

BUILDING NOTES

EXTRA FEATURES

LN	OB/XF CODE	DESCRIPTION	BLD	CAP	L	W	UNITS	UT	Adj R	ADJ UNIT PRICE	ORIG COND	YEAR ON	YEAR ACTUAL	Q	% COND	OB/XF MKT VALUE	NOTES
1	0166	CONC,PAVMT	0	100	0	0	547.00	UT	2.00	2.00	100	2018	2018	3	100	1,094	
2	0166	CONC,PAVMT	0	100	10	18	180.00	UT	2.00	2.00	100	2025	2024		100	360	

BUILDING DIMENSIONS

BAS=[ORIG=0,0] W5 N5 W24 S6 W12 S6 D3L3 W27 S28 E5 S2 E32 N2 E5 N18 E24 N8 E5 N12 $
FGR=[ORIG=-29,38] S4 E24 N22 W24 S18 $
FSP=[ORIG=-41,1] W30 S9 E27 U3R3 N6 $
FOP=[ORIG=-66,40] S6 E32 N6 W32 $
FGR=[YR=2025;ORIG=-132,-9] E21 S37 W21 N37 $
FOP=[YR=2025;ORIG=-132,28] E21 S10 W21 N10 $
FCP=[YR=2025;ORIG=-111,-9] E18 S37 W18 N37 $
.

LAND DESCRIPTION

TOTAL OB/XF 1,454

LN	USE CODE	CLS	LAND USE DESCRIPTION	CAP	RD	LOC ZONE	FRONT	DEPTH	TOT LND UTS	UNIT TYPE	DT	DPTH FACT	% COND	TOT ADJ	UNIT PRICE	ADJ UNIT PRICE	LAND VALUE	OTHER ADJUSTMENTS AND NOTES	YEAR	DENSITY	DECL	FRZ	YR	CONSRV
1	0100	C	SFR	100		A-3	0.00	0.00	1.00	LT		1.00	1.00	1.00	70,000.00	70,000.00	70,000							

REVIEW DATE 04/11/2024 BY JB Total Acres: 5.01 Total Land Value: 70,000 Market: 0 Agricultural: 0 Common: 70,000 PRINTED 11/19/2025 BY SYS