LOT 15 RIVER RISE RESIDENTIAL S/
WD 1074-2582, 1074-2586, 1122-14

CATO ROBERT H JR/CATO SHERRY B
397 SW GREY WAY
HIGH SPRINGS, FL 32643

**2026**

**16-7S-17-10006-215**

## COLUMBIA COUNTY PROPERTY



## BUILDING CHARACTERISTICS

| ELEMENT | CD | CONSTRUCTION |
|---|---|---|
| Exterior Wall | 16 | WD FR STUC 90 |
| Exterior Wall | 19 | COMMON BRK 10 |
| Roof Structur | 03 | GABLE/HIP 100 |
| Roof Cover | 03 | COMP SHNGL 100 |
| Interior Wall | 05 | DRYWALL 100 |
| Interior Floo | 14 | CARPET 90 |
| Interior Floo | 15 | HARDTILE 10 |
| Air Condition | 03 | CENTRAL 100 |
| Heating Type | 04 | AIR DUCTED 100 |
| Bedrooms | | 4 100 |
| Bathrooms | | 2.5 100 |
| Frame | 02 | WOOD FRAME 100 |
| Stories | 1. | 1. 100 |
| Architectual | 05 | CONV 100 |
| Units | | 0 100 |
| Condition Adj | 03 | 03 100 |
| Kitchen Adjus | 01 | 01 100 |
| Quality | 06 | 06 |
| DOR CODE | 0100 | SINGLE FAMILY |
| MAP NUM | | MKT AREA 02 |
| NEIGHBORHOOD/LOC | 16717.020 | 1.00/ |

| AREA TYPE | TOTAL GROSS AREA | PCT OF BASE | YEAR | TOT ADJ AREA | SUBAREA MARKET VALUE |
|---|---|---|---|---|---|
| BAS | 2,606 | 100 | | 2,606 | 237,554 |
| FCP | 450 | 25 | | 112 | 10,210 |
| FGR | 624 | 55 | | 343 | 31,267 |
| FOP | 110 | 30 | | 33 | 3,008 |
| FSP | 340 | 40 | | 136 | 12,398 |
| UDG | 900 | 55 | | 495 | 45,123 |
| UST | 540 | 45 | | 243 | 22,151 |
| TOTALS | 5,570 | | | 3,968 | 361,710 |

## MARKET ADJUSTMENTS

| TYPE | MDL | EFF. AREA | TOT ADJ PTS | EFF. BASE RATE | REPL. COST NEW | AYB | EYB | ECON | FNCT | | NORM | % COND |
|---|---|---|---|---|---|---|---|---|---|---|---|---|
| 0100 | 01 | 3,968 | 112.3406 | 125.82 | 499,254 | 2006 | 2006 | 0 | 0 | 0 | 27.55 | 72.45 |

1 SINGLE FAM 100% - 2007 Heated Area: 2606 HX Base Yr 2007

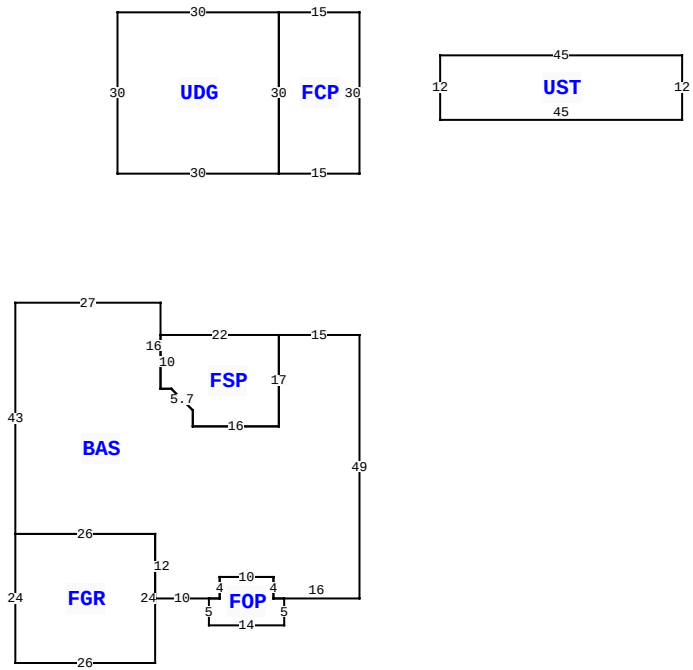


397 SW GREY WAY, HIGH SPRINGS

| | | | |
|---|---|---|---|
| BLD DATE | | LGL DATE | |
| XF DATE | | LAND DATE | 05/15/2024 MLU |
| INC DATE | | AG DATE | |

## VALUATION SUMMARY

| | | |
|---|---|---|
| VALUATION BY | | STANDARD |
| Tax Group: 3 | Tax Dist: | |
| BUILDING MARKET VALUE | | 361,710 |
| TOTAL MARKET OB/XF VALUE | | 4,716 |
| TOTAL LAND VALUE - MARKET | | 70,000 |
| TOTAL MARKET VALUE | | 436,426 |
| SOH/AGL Deduction | | 115,024 |
| ASSESSED VALUE | | 321,402 |
| TOTAL EXEMPTION VALUE | HX HB | 50,722 |
| BASE TAXABLE VALUE | | 270,680 |
| TOTAL JUST VALUE | | 436,426 |
| NCON VALUE | | 0 |
| INCOME VALUE | | |
| PREVIOUS YEAR MKT VALUE | | 443,665 |

| PERMIT NUM | DESCRIPTION | AMT | ISSUED |
|---|---|---|---|
| 000053791 | Roof Replacement | 16,761 | 08/06/2025 |
| 000053727 | Roof Replacement | 50,082 | 07/31/2025 |
| 28427 | STORAGE | 180 | 03/18/2010 |
| 24464 | SFR | 787 | 05/05/2006 |

## SALES DATA

| OFF RECORD Number | DATE | TYPE INST | Q U | V I | RSN CD | SALE PRICE |
|---|---|---|---|---|---|---|
| 1446/302 | 8/27/2021 | LE | U | I | 14 | 100 |
| GRANTOR: CATO ROBERT H | | | | | | |
| GRANTEE: CATO ROBERT H | | | | | | |
| 1074/2586 | 2/21/2006 | WD | Q | V | | 79,700 |
| GRANTOR: NEVIN SUMMERS | | | | | | |
| GRANTEE: ROBERT AND SHERRY C | | | | | | |

## BUILDING NOTES

## BUILDING DIMENSIONS

BAS= W15 FSP= W22 S10 E2 D4 R4 S3 E16 N17$ S17 W16 N3 L4 U4 W2 N16 W27 S43 FGR= S24 E26 N24 W26$ E26 S12 E10 FOP= S5 E14 N5 W2 N4 W10 S4 W2$ E2 N4 E10 S4 E16 N49$ PTR= N30 FCP= N30 W15 UDG= W30 S30 E30 N30$ S30 E15$ S30$ PTR= N40 E60 UST= N12 W45 S12 E45$ S40 W60$.

## EXTRA FEATURES

| LN | OB/XF CODE | DESCRIPTION | BLD | CAP | L | W | UNITS | UT | Adj R | ADJ UNIT PRICE | ORIG COND | YEAR ON | YEAR ACTUAL | Q | % COND | OB/XF MKT VALUE | NOTES |
|---|---|---|---|---|---|---|---|---|---|---|---|---|---|---|---|---|---|
| 1 | 0180 | FPLC 1STRY | 0 | 100 | 0 | 0 | 1.00 | UT | 2,000.00 | 2,000.00 | 100 | 2006 | 2006 | 3 | 100 | 2,000 | |
| 2 | 0166 | CONC,PAVMT | 0 | 100 | 0 | 0 | 672.00 | UT | 3.00 | 3.00 | 100 | 2006 | 2006 | 3 | 100 | 2,016 | |
| 3 | 0081 | DECKING WI | 0 | 100 | 0 | 0 | 1.00 | UT | 0.00 | 0.00 | 100 | 2010 | 2010 | 3 | 100 | 400 | |
| 4 | 0252 | LEAN-TO W/ | 0 | 100 | 0 | 0 | 1.00 | UT | 0.00 | 0.00 | 100 | 2010 | 2010 | 3 | 100 | 300 | |

## LAND DESCRIPTION

TOTAL OB/XF 4,716

| LN | USE CODE | CLS | LAND USE DESCRIPTION | CAP | RD | LOC ZONE | FRONT | DEPTH | TOT LND UTS | UNIT TYPE | DT | DPTH FACT | % COND | TOT ADJ | UNIT PRICE | ADJ UNIT PRICE | LAND VALUE | OTHER ADJUSTMENTS AND NOTES | YEAR | DENSITY | DECL | FRZ | YR | CONSRV |
|---|---|---|---|---|---|---|---|---|---|---|---|---|---|---|---|---|---|---|---|---|---|---|---|---|
| 1 | 0100 | C | SFR | 100 | | A-3 | 0.00 | 0.00 | 1.00 | LT | | 1.00 | 1.00 | 1.00 | 70,000.00 | 70,000.00 | 70,000 | | | | | | | |

REVIEW DATE 09/15/2025 BY chuck Total Acres: 5.01 Total Land Value: 70,000 Market: 0 Agricultural: 0 Common: 70,000 PRINTED 10/06/2025 BY SYS