LOTS 3 & 4 BLK C CENTURY OAK S/D
529-414, DC 959-154, QC 1064-412

WALL WALTER R/WALL SHARON K
162 SE WHISTLE LOOP
LAKE CITY, FL 32025

2026

16-4S-17-08382-428

COLUMBIA COUNTY PROPERTY

BUILDING CHARACTERISTICS

ELEMENT	CD	CONSTRUCTION
Exterior Wall	32	HARDIE BRD 70
Exterior Wall	19	COMMON BRK 30
Roof Structur	03	GABLE/HIP 100
Roof Cover	03	COMP SHNGL 100
Interior Wall	05	DRYWALL 100
Interior Floo	14	CARPET 90
Interior Floo	08	SHT VINYL 10
Air Condition	03	CENTRAL 100
Heating Type	04	AIR DUCTED 100
Bedrooms		3 100
Bathrooms		2 100
Frame	02	WOOD FRAME 100
Stories	1.	1. 100
Architectual	05	CONV 100
Units		0 100
Condition Adj	03	03 100
Kitchen Adjus	01	01 100
Quality	05	05
DOR CODE	0100	SINGLE FAMILY
MAP NUM		MKT AREA 06
NEIGHBORHOOD/LOC	16417.090	1.00/

AREA TYPE	TOTAL GROSS AREA	PCT OF BASE	YEAR	TOT ADJ AREA	SUBAREA MARKET VALUE
BAS	20	100		20	1,537
BAS	130	100		130	9,994
BAS	266	100		266	20,449
BAS	392	100		392	30,135
BAS	1,465	100		1,465	112,623
FOP	112	30		34	2,614
FSP	115	40		46	3,536
UDC	280	25		70	5,381
UDU	100	55		55	4,228
TOTALS	2,880			2,478	190,497

MARKET ADJUSTMENTS

TYPE	MDL	EFF. AREA	TOT ADJ PTS	EFF. BASE RATE	REPL. COST NEW	AYB	EYB	ECON	FNCT		NORM	% COND
0100	01	2,478	105.6000	118.27	293,073	1982	1982	0	0	0	35.00	65.00

1 SINGLE FAM 100% - 2018 Heated Area: 2273 HX Base Yr 2018

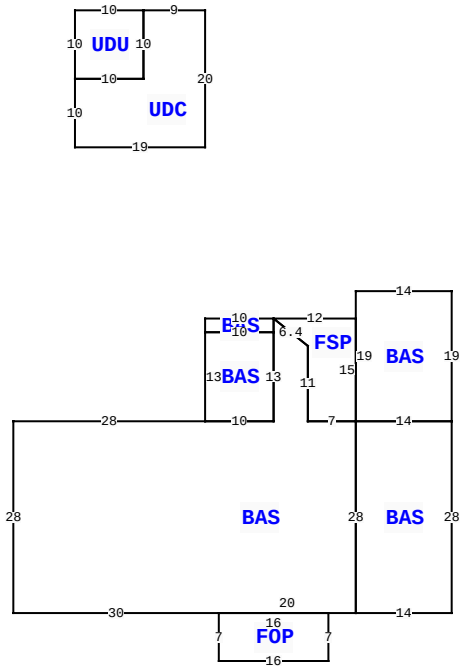

162 SE WHISTLE LOOP, LAKE CITY

BLD DATE		LGL DATE	
XF DATE		LAND DATE	04/21/2023 MLU
INC DATE		AG DATE	

VALUATION SUMMARY

VALUATION BY		STANDARD
Tax Group: 2	Tax Dist:	
BUILDING MARKET VALUE		190,497
TOTAL MARKET OB/XF VALUE		1,000
TOTAL LAND VALUE - MARKET		37,000
TOTAL MARKET VALUE		228,497
SOH/AGL Deduction		96,791
ASSESSED VALUE		131,706
TOTAL EXEMPTION VALUE	HX HB	50,722
BASE TAXABLE VALUE		80,984
TOTAL JUST VALUE		228,497
NCON VALUE		0
INCOME VALUE		
PREVIOUS YEAR MKT VALUE		228,497

PERMIT NUM	DESCRIPTION	AMT	ISSUED
000041547	Roof Replacement	17,000	03/18/2021
39321	REMODEL	0	02/20/2020
20411	ADDN SFR	122	02/13/2003

SALES DATA

OFF RECORD Number	DATE	TYPE INST	Q U /	V I /	RSN CD	SALE PRICE
1337/2065	5/19/2017	WD	Q	I	01	96,100
GRANTOR: PATRICIA A WILLIAMS						
GRANTEE: WALTER R & SHARON K						
1071/2613	12/12/2005	WD	Q	I	01	100
GRANTOR: EVA M WALL,DONALD A &						
GRANTEE: EVA WALL & DONALD &						

BUILDING NOTES

BUILDING DIMENSIONS

BAS= W28 S28 E30 FOP= S7 E16 N7 W16$ E20 BAS= E14 N28 W14 S28$ N28 BAS= E14 N19 W14 S19$ FSP= N15 W12 D4 R5 S11 E7$ W7 N11 L5 U4 BAS= W10 S2 E10 N2$ S2 BAS= W10 S13 E10 N13$ S13 W10$ PTR= N40 UDC= N20 W9 UDU= W10 S10 E10 N10$ S10 W10 S10 E19$ S40$.

EXTRA FEATURES

LN	OB/XF CODE	DESCRIPTION	BLD	CAP	L	W	UNITS	UT	Adj R	ADJ UNIT PRICE	ORIG COND	YEAR ON	YEAR ACTUAL	Q	% COND	OB/XF MKT VALUE	NOTES
1	0166	CONC,PAVMT	0	100	0	0	1.00	UT	0.00	0.00	100	1993	1993	3	100	600	
2	0081	DECKING WI	0	100	0	0	1.00	UT	0.00	0.00	100	2013	2013	3	100	400	

LAND DESCRIPTION

TOTAL OB/XF 1,000

LN	USE CODE	CLS	LAND USE DESCRIPTION	CAP	RD	LOC ZONE	FRONT	DEPTH	TOT LND UTS	UNIT TYPE	DT	DPTH FACT	% COND	TOT ADJ	UNIT PRICE	ADJ UNIT PRICE	LAND VALUE	OTHER ADJUSTMENTS AND NOTES	YEAR	DENSITY	DECL	FRZ	YR	CONSRV
1	0100	C	SFR	100		A-1	0.00	0.00	1.00	LT		1.00	1.00	1.00	18,500.00	18,500.00	18,500							
2	0100	C	SFR	100		A-1	0.00	0.00	1.00	LT		1.00	1.00	1.00	18,500.00	18,500.00	18,500							

REVIEW DATE 04/06/2021 BY JS Total Acres: 0.78 Total Land Value: 37,000 Market: 0 Agricultural: 0 Common: 37,000 PRINTED 11/19/2025 BY SYS