LOT 10 GLENWOOD S/D UNIT 2.
ORB 817-145, 870-2162,

MOORE JESSICA NICOLE
305 SE MOJAVE WAY
LAKE CITY, FL 32025

2026

16-4S-17-08382-078

COLUMBIA COUNTY PROPERTY

BUILDING CHARACTERISTICS

ELEMENT	CD	CONSTRUCTION
Exterior Wall	31	VINYL SID 100
Roof Structur	03	GABLE/HIP 100
Roof Cover	12	MODULAR MT 100
Interior Wall	05	DRYWALL 100
Interior Floo	14	CARPET 90
Interior Floo	08	SHT VINYL 10
Air Condition	03	CENTRAL 100
Heating Type	04	AIR DUCTED 100
Bedrooms		3 100
Bathrooms		2 100
Frame	01	NONE 100
Stories	1.5	1.5 100
Architectual	05	CONV 100
Units		0 100
Condition Adj	02	02 100
Kitchen Adjus	01	01 100
Quality	05	05
DOR CODE	0100	SINGLE FAMILY
MAP NUM		MKT AREA 06
NEIGHBORHOOD/LOC	16417.020	1.00/

AREA TYPE	TOTAL GROSS AREA	PCT OF BASE	YEAR	TOT ADJ AREA	SUBAREA MARKET VALUE
BAS	984	100		984	74,168
FCP	360	25		90	6,783
FOP	55	30		16	1,206
FOP	96	30		29	2,186
FUS	540	100		540	40,702
UDU	100	55		55	4,146
UOP	196	20		39	2,939
TOTALS	2,331			1,753	132,131

MARKET ADJUSTMENTS

TYPE	MDL	EFF. AREA	TOT ADJ PTS	EFF. BASE RATE	REPL. COST NEW	AYB	EYB	ECON	FNCT		NORM	% COND
0100	01	1,753	103.5380	115.96	203,278	1986	1986	0	0	0	35.00	65.00

1 SINGLE FAM 100% - 2013 Heated Area: 1524 HX Base Yr 2013

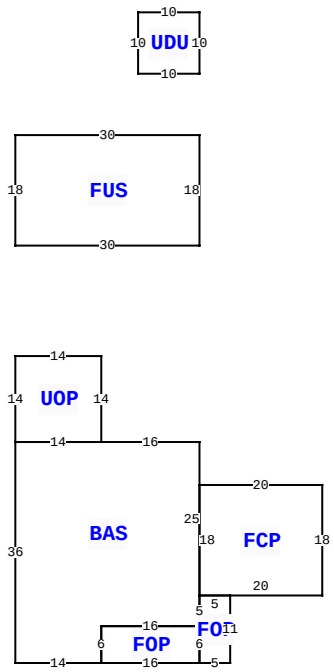

305 SE MOJAVE WAY, LAKE CITY

BLD DATE		LGL DATE	
XF DATE		LAND DATE	04/21/2023 MLU
INC DATE		AG DATE	

VALUATION SUMMARY

VALUATION BY		STANDARD
Tax Group: 2	Tax Dist:	
BUILDING MARKET VALUE		132,131
TOTAL MARKET OB/XF VALUE		1,200
TOTAL LAND VALUE - MARKET		18,500
TOTAL MARKET VALUE		151,831
SOH/AGL Deduction		63,757
ASSESSED VALUE		88,074
TOTAL EXEMPTION VALUE	HX HB	50,722
BASE TAXABLE VALUE		37,352
TOTAL JUST VALUE		151,831
NCON VALUE		0
INCOME VALUE		
PREVIOUS YEAR MKT VALUE		151,831

SALE:1:1: ADDING ROBERT TO DEED

PERMIT NUM	DESCRIPTION	AMT	ISSUED

SALES DATA

OFF RECORD Number	DATE	TYPE INST	Q U	V I	RSN CD	SALE PRICE
1232/0278	3/22/2012	WD	U	I	12	70,000
GRANTOR: FIRST FEDERAL BANK OF						
GRANTEE: JESSICA NICOLE MOOR						
1204/1570	10/27/2010	CT	U	I	11	100
GRANTOR: CLERK OF COURT (SHAWN						
GRANTEE: FIRST FEDERAL BANK						

BUILDING NOTES

BUILDING DIMENSIONS

BAS= W16 UOP= N14 W14 S14 E14$ W14 S36 E14 FOP= E16 N6 W16 S6$ N6 E16 FOP= S6 E5 N11 W5 S5$ N5 FCP= E20 N18 W20 S18$ N25$ PTR=N50 FUS= W30 S18 E30 N18$ S50$ PTR=N60 UDU= N10 W10 S10 E10$S60$.

EXTRA FEATURES

LN	OB/XF CODE	DESCRIPTION	BLD	CAP	L	W	UNITS	UT	Adj R	ADJ UNIT PRICE	ORIG COND	YEAR ON	YEAR ACTUAL	Q	% COND	OB/XF MKT VALUE	NOTES
1	0080	DECKING	0	100	0	0	1.00	UT	600.00	600.00	50	1993	1993	3	50	300	
2	0120	CLFENCE 4	0	100	0	0	1.00	UT	0.00	0.00	100	1998	1998	3	100	300	
3	0166	CONC,PAVMT	0	100	0	0	1.00	UT	0.00	0.00	100	1998	1998	3	100	600	

LAND DESCRIPTION

TOTAL OB/XF 1,200

LN	USE CODE	CLS	LAND USE DESCRIPTION	CAP	RD	LOC ZONE	FRONT	DEPTH	TOT LND UTS	UNIT TYPE	DT	DPTH FACT	% COND	TOT ADJ	UNIT PRICE	ADJ UNIT PRICE	LAND VALUE	OTHER ADJUSTMENTS AND NOTES	YEAR	DENSITY	DECL	FRZ	YR	CONSRV
1	0100	C	SFR	100		RSF-2	0.00	0.00	1.00	LT		1.00	1.00	1.00	18,500.00	18,500.00	18,500							

REVIEW DATE 05/03/2017 BY DF Total Acres: 0.46 Total Land Value: 18,500 Market: 0 Agricultural: 0 Common: 18,500 PRINTED 11/17/2025 BY SYS