LOT 6 BLOCK B DEERWOOD FOREST UN
WD 1012-976, WD 1359-877,

COOPER JESSICA ANN/COOPER MARCUS A
356 SE FAWN GLN
LAKE CITY, FL 32025

2026

16-4S-17-08302-184

COLUMBIA COUNTY PROPERTY

BUILDING CHARACTERISTICS

ELEMENT	CD	CONSTRUCTION
Exterior Wall	05	AVERAGE 70
Exterior Wall	17	MSNRY STUC 30
Roof Structur	08	IRREGULAR 100
Roof Cover	03	COMP SHNGL 100
Interior Wall	05	DRYWALL 100
Interior Floo	14	CARPET 90
Interior Floo	06	VINYL ASB 10
Air Condition	03	CENTRAL 100
Heating Type	04	AIR DUCTED 100
Bedrooms		3 100
Bathrooms		2.5 100
Frame	01	NONE 100
Stories	1.5	1.5 100
Architectual	05	CONV 100
Units		0 100
Condition Adj	03	03 100
Kitchen Adjus	01	01 100
Quality	05	05
DOR CODE	0100	SINGLE FAMILY
MAP NUM		MKT AREA 06
NEIGHBORHOOD/LOC	9417.0800	1.00/

AREA TYPE	TOTAL GROSS AREA	PCT OF BASE	YEAR	TOT ADJ AREA	SUBAREA MARKET VALUE
BAS	1,409	100		1,409	113,996
FGR	462	55		254	20,550
FOP	36	30		11	890
FUS	899	100		899	72,734
UOP	144	20		29	2,347
USP	180	35		63	5,097
TOTALS	3,130			2,665	215,613

MARKET ADJUSTMENTS

TYPE	MDL	EFF. AREA	TOT ADJ PTS	EFF. BASE RATE	REPL. COST NEW	AYB	EYB	ECON	FNCT		NORM	% COND
0100	01	2,665	111.1320	124.47	331,713	1979	1979	0	0	0	35.00	65.00

1 SINGLE FAM 0% - 0 Heated Area: 2308 HX Base Yr

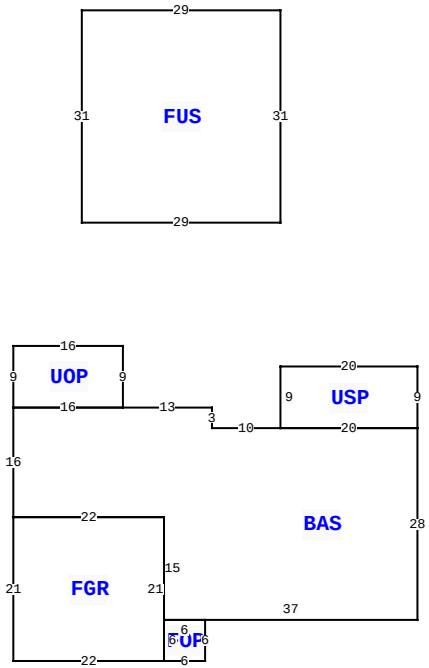

356 SE FAWN GLN, LAKE CITY

BLD DATE		LGL DATE	
XF DATE		LAND DATE	04/21/2023 MLU
INC DATE		AG DATE	

VALUATION SUMMARY

VALUATION BY	STANDARD
Tax Group: 2	Tax Dist:
BUILDING MARKET VALUE	215,613
TOTAL MARKET OB/XF VALUE	16,136
TOTAL LAND VALUE - MARKET	18,500
TOTAL MARKET VALUE	250,249
SOH/AGL Deduction	0
ASSESSED VALUE	250,249
TOTAL EXEMPTION VALUE	0
BASE TAXABLE VALUE	250,249
TOTAL JUST VALUE	250,249
NCON VALUE	0
INCOME VALUE	
PREVIOUS YEAR MKT VALUE	250,249

PERMIT NUM	DESCRIPTION	AMT	ISSUED
28481	MAINT/ALTR	45	04/12/2010

SALES DATA

OFF RECORD Number	DATE	TYPE INST	Q U /	V I /	RSN CD	SALE PRICE
1359/0877	5/04/2018	WD	Q	I	01	136,000
GRANTOR: ROBERT P YORKE						
GRANTEE: JESSICA ANN & MARCU						
1012/0976	4/09/2004	WD	Q	I		149,900
GRANTOR: PAUL & PATRICIA BRYAN						
GRANTEE: ROBERT P YORKE						

BUILDING NOTES

BUILDING DIMENSIONS

BAS= W10 N3 W13 UOP= N9 W16 S9 E16$ W16 S16 FGR= S21 E22 N21 W22$ E22 S15 FOP= S6 E6 N6 W6$ E37 N28 USP= N9 W20 S9E20$ W20$PTR= N30 FUS= N31 W29S31 E29$ S30$.

EXTRA FEATURES

LN	OB/XF CODE	DESCRIPTION	BLD	CAP	L	W	UNITS	UT	Adj R	ADJ UNIT PRICE	ORIG COND	YEAR ON	YEAR ACTUAL	Q	% COND	OB/XF MKT VALUE	NOTES
1	0190	FPLC PF	0	0	0	0	1.00	UT	1,200.00	1,200.00	100	0	0	3	100	1,200	
2	0280	POOL R/CON	0	0	16	32	512.00	UT	70.00	70.00	100	1987	1987	3	40	14,336	
3	0166	CONC,PAVMT	0	0	0	0	1.00	UT	0.00	0.00	100	0	0	3	100	600	

LAND DESCRIPTION

TOTAL OB/XF 16,136

LN	USE CODE	CLS	LAND USE DESCRIPTION	CAP	RD	LOC ZONE	FRONT	DEPTH	TOT LND UTS	UNIT TYPE	DT	DPTH FACT	% COND	TOT ADJ	UNIT PRICE	ADJ UNIT PRICE	LAND VALUE	OTHER ADJUSTMENTS AND NOTES	YEAR	DENSITY	DECL	FRZ	YR	CONSRV
1	0100	C	SFR	0		RSF-1	0.00	0.00	1.00	LT		1.00	1.00	1.00	18,500.00	18,500.00	18,500							

REVIEW DATE 09/04/2013 BY DF Total Acres: 1.00 Total Land Value: 18,500 Market: 0 Agricultural: 0 Common: 18,500 PRINTED 11/18/2025 BY SYS