LOT 1 BLOCK B DEERWOOD FOREST
UNIT 3. ORB 423-22,
451-424, WD 1127-1984

WEHRLI GEORGE W/WEHRLI IRMA M
P O BOX 1846
LAKE CITY, FL 32056

2025

16-4S-17-08302-179

COLUMBIA COUNTY PROPERTY

BUILDING CHARACTERISTICS

ELEMENT	CD	CONSTRUCTION
Exterior Wall	19	COMMON BRK 60
Exterior Wall	12	CEDAR 40
Roof Structur	03	GABLE/HIP 100
Roof Cover	12	MODULAR MT 100
Interior Wall	05	DRYWALL 100
Interior Floo	14	CARPET 60
Interior Floo	08	SHT VINYL 40
Air Condition	03	CENTRAL 100
Heating Type	04	AIR DUCTED 100
Bedrooms		4 100
Bathrooms		3 100
Frame	01	NONE 100
Stories	1.5	1.5 100
Architectual	05	CONV 100
Units		0 100
Condition Adj	03	03 100
Kitchen Adjus	01	01 100
Quality	05	05
DOR CODE	0100	SINGLE FAMILY
MAP NUM		MKT AREA 06
NEIGHBORHOOD/LOC	9417.0800	1.00/

AREA TYPE	TOTAL GROSS AREA	PCT OF BASE	YEAR	TOT ADJ AREA	SUBAREA MARKET VALUE
BAS	162	100		162	14,199
BAS	318	100		318	27,871
BAS	1,372	100		1,372	120,250
FGR	228	55		125	10,956
FOP	36	30		11	964
FOP	70	30		21	1,841
FUS	716	100		716	62,754
UOP	584	20		117	10,254
TOTALS	3,486			2,842	249,090

MARKET ADJUSTMENTS

TYPE	MDL	EFF. AREA	TOT ADJ PTS	EFF. BASE RATE	REPL. COST NEW	AYB	EYB	ECON	FNCT		NORM	% COND
0100	01	2,842	120.3930	134.84	383,215	1979	1979	0	0	0	35.00	65.00

1 SINGLE FAM 100% - 0 Heated Area: 2568 HX Base Yr

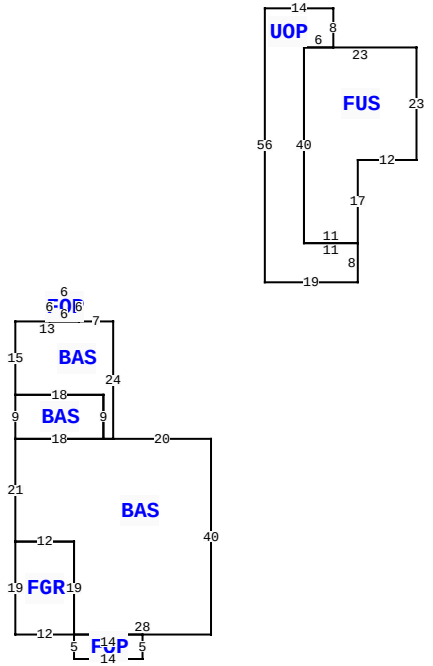

488 SE FAWN GLN, LAKE CITY

BLD DATE		LGL DATE	
XF DATE		LAND DATE	04/21/2023 MLU
INC DATE		AG DATE	

VALUATION SUMMARY

VALUATION BY		STANDARD
Tax Group: 2	Tax Dist:	
BUILDING MARKET VALUE		249,090
TOTAL MARKET OB/XF VALUE		2,887
TOTAL LAND VALUE - MARKET		18,500
TOTAL MARKET VALUE		270,477
SOH/AGL Deduction		123,065
ASSESSED VALUE		147,412
TOTAL EXEMPTION VALUE	HX HB	50,722
BASE TAXABLE VALUE		96,690
TOTAL JUST VALUE		270,477
NCON VALUE		0
INCOME VALUE		
PREVIOUS YEAR MKT VALUE		254,904

PERMIT NUM	DESCRIPTION	AMT	ISSUED
000049733	Roof Replacement	28,985	05/06/2024
24830	ADDN SFR	280	08/03/2006

SALES DATA

OFF RECORD Number	DATE	TYPE INST	Q U	V I	RSN CD	SALE PRICE

BUILDING NOTES

BUILDING DIMENSIONS

BAS= W20 BAS= N24 W7 FOP= N6 W6 S6 E6$ W13 S15 E18 S9 E2$
W2BAS= N9 W18 S9 E18$ W18 S21 FGR= S19 E12 N19 W12$ E12 S19
FOP= S5 E14N5 W14$ E28 N40$PTR=N40 E30 FUS= N17 E12 N23 W23
UOP= E6 N8 W14 S56 E19 N8 W11 N40$ S40 E11$ S40 W30$.

EXTRA FEATURES

LN	OB/XF CODE	DESCRIPTION	BLD	CAP	L	W	UNITS	UT	Adj R	ADJ UNIT PRICE	ORIG COND	YEAR ON	YEAR ACTUAL	Q	% COND	OB/XF MKT VALUE	NOTES
1	0190	FPLC PF	0	100	0	0	1.00	UT	1,200.00	1,200.00	100	0	0	3	100	1,200	
2	0080	DECKING	0	100	10	39	390.00	UT	3.30	3.30	100	0	0	3	100	1,287	
3	0296	SHED METAL	0	100	0	0	1.00	UT	0.00	0.00	100	2004	2004	3	100	400	

LAND DESCRIPTION

TOTAL OB/XF 2,887

LN	USE CODE	CLS	LAND USE DESCRIPTION	CAP	RD	LOC ZONE	FRONT	DEPTH	TOT LND UTS	UNIT TYPE	DT	DPTH FACT	% COND	TOT ADJ	UNIT PRICE	ADJ UNIT PRICE	LAND VALUE	OTHER ADJUSTMENTS AND NOTES	YEAR	DENSITY	DECL	FRZ	YR	CONSRV
1	0100	C	SFR	100		RSF-1	0.00	0.00	1.00	LT		1.00	1.00	1.00	18,500.00	18,500.00	18,500							

REVIEW DATE 06/03/2024 BY JS Total Acres: 1.02 Total Land Value: 18,500 Market: 0 Agricultural: 0 Common: 18,500 PRINTED 08/15/2025 BY SYS