LOT 3 FOREST COUNTRY PHASE 1 ADD
WD 1399-351, WD 1471-2782, WD 15

BELL CHRIS LAVON DENISE/BELL PAUL WILLIAM
398 SW SLASH LN
LAKE CITY, FL 32024

2026

16-4S-16-03048-018

COLUMBIA COUNTY PROPERTY

BUILDING CHARACTERISTICS

ELEMENT	CD	CONSTRUCTION
Exterior Wall	16	WD FR STUC 100
Roof Structur	08	IRREGULAR 100
Roof Cover	03	COMP SHNGL 100
Interior Wall	05	DRYWALL 100
Interior Floo	14	CARPET 60
Interior Floo	15	HARDTILE 40
Air Condition	03	CENTRAL 100
Heating Type	04	AIR DUCTED 100
Bedrooms		3 100
Bathrooms		2 100
Frame		N/A 100
Stories	1.	1. 100
Architectual	05	CONV 100
Units		0 100
Condition Adj	03	03 100
Kitchen Adjus	01	01 100
Quality	05	05
DOR CODE	0100	SINGLE FAMILY
MAP NUM		MKT AREA 06
NEIGHBORHOOD/LOC	16416.020	1.00/

AREA TYPE	TOTAL GROSS AREA	PCT OF BASE	YEAR	TOT ADJ AREA	SUBAREA MARKET VALUE
BAS	2,094	100		2,094	184,368
FGR	732	55		403	35,482
FOP	144	30		43	3,786
FOP	210	30		63	5,547
PTO	511	5		26	2,289
TOTALS	3,691			2,629	231,473

MARKET ADJUSTMENTS

TYPE	MDL	EFF. AREA	TOT ADJ PTS	EFF. BASE RATE	REPL. COST NEW	AYB	EYB	ECON	FNCT		NORM	% COND
0100	01	2,629	112.3080	125.78	330,676	1980	2005	0	0	0	30.00	70.00

1 SINGLE FAM 0% - 2025 Heated Area: 2094 HX Base Yr

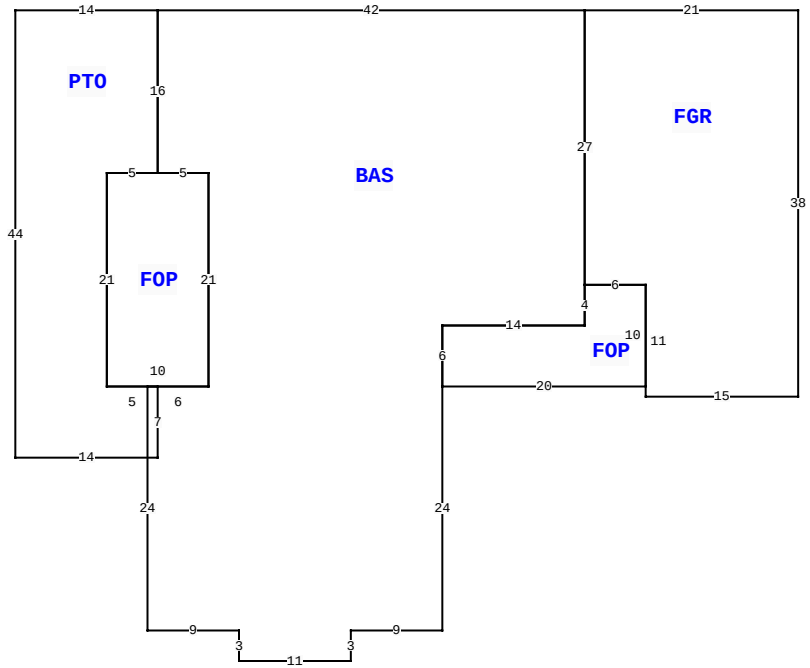

398 SW SLASH LN, LAKE CITY

BLD DATE		LGL DATE	
XF DATE		LAND DATE	04/03/2025 MLU
INC DATE		AG DATE	

VALUATION SUMMARY

VALUATION BY	STANDARD
Tax Group: 3	Tax Dist:
BUILDING MARKET VALUE	231,473
TOTAL MARKET OB/XF VALUE	2,000
TOTAL LAND VALUE - MARKET	35,000
TOTAL MARKET VALUE	268,473
SOH/AGL Deduction	0
ASSESSED VALUE	268,473
TOTAL EXEMPTION VALUE	0
BASE TAXABLE VALUE	268,473
TOTAL JUST VALUE	268,473
NCON VALUE	0
INCOME VALUE	
PREVIOUS YEAR MKT VALUE	273,433

PERMIT NUM	DESCRIPTION	AMT	ISSUED
27372	MAINT/ALTR	45	09/29/2008
27339	REMODEL	200	09/15/2008

SALES DATA

OFF RECORD Number	DATE	TYPE INST	Q U	V I	RSN CD	SALE PRICE
1513/1847	4/25/2024	WD	Q	I	01	320,000
GRANTOR: LEE LINDA C LIVING TR						
GRANTEE: BELL CHRIS LAVON DE						
1471/2782	7/26/2022	WD	U	I	11	100
GRANTOR: LEE LINDA C						
GRANTEE: LEE LINDA C LIVING						

BUILDING NOTES

BUILDING DIMENSIONS

BAS= W42 PTO= W14 S44 E14 N7 W5 N21 E5 N16$ S16 FOP= W5 S21E10N21 W5$ E5 S21 W6 S24 E9 S3E11 N3 E9 N24 FOP= E20 N10 W6S4 W14 S6$ N6 E14 N4 FGR= E6 S11 E15 N38 W21 S27$ N27$.

EXTRA FEATURES

LN	OB/XF CODE	DESCRIPTION	BLD	CAP	L	W	UNITS	UT	Adj R	ADJ UNIT PRICE	ORIG COND	YEAR ON	YEAR ACTUAL	Q	% COND	OB/XF MKT VALUE	NOTES
1	0166	CONC,PAVMT	0	0	0	0	1.00	UT	0.00	0.00	100	1993	1993	3	100	800	
2	0190	FPLC PF	0	0	0	0	1.00	UT	1,200.00	1,200.00	100	1993	1993	3	100	1,200	

LAND DESCRIPTION

TOTAL OB/XF 2,000

LN	USE CODE	CLS	LAND USE DESCRIPTION	CAP	RD	LOC ZONE	FRONT	DEPTH	TOT LND UTS	UNIT TYPE	DT	DPTH FACT	% COND	TOT ADJ	UNIT PRICE	ADJ UNIT PRICE	LAND VALUE	OTHER ADJUSTMENTS AND NOTES	YEAR	DENSITY	DECL	FRZ	YR	CONSRV
1	0100	C	SFR	0		RSF-1	0.00	0.00	1.00	LT		1.00	1.00	1.00	35,000.00	35,000.00	35,000							

REVIEW DATE 06/18/2024 BY KS Total Acres: 0.73 Total Land Value: 35,000 Market: 0 Agricultural: 0 Common: 35,000 PRINTED 11/18/2025 BY SYS