LOT 10 MEADOW VISTA S/D.
ORB 803-1448, 823-176, 823-174,

WAMPOLE EARL W/WAMPOLE DEBRA E
295 SW FANTASY GLN
LAKE CITY, FL 32024

2025

16-4S-16-03025-110

COLUMBIA COUNTY PROPERTY

BUILDING CHARACTERISTICS

ELEMENT	CD	CONSTRUCTION
Exterior Wall	16	WD FR STUC 100
Roof Structur	08	IRREGULAR 100
Roof Cover	03	COMP SHNGL 100
Interior Wall	05	DRYWALL 100
Interior Floo	14	CARPET 90
Interior Floo	15	HARDTILE 10
Air Condition	03	CENTRAL 100
Heating Type	04	AIR DUCTED 100
Bedrooms		3 100
Bathrooms		2 100
Frame	01	NONE 100
Stories	1.	1. 100
Architectual	05	CONV 100
Units		0 100
Condition Adj	03	03 100
Kitchen Adjus	01	01 100
Quality	07	07
DOR CODE	0100	SINGLE FAMILY
MAP NUM		MKT AREA 06
NEIGHBORHOOD/LOC	16416.030	1.00/

AREA TYPE	TOTAL GROSS AREA	PCT OF BASE	YEAR	TOT ADJ AREA	SUBAREA MARKET VALUE
BAS	1,874	100		1,874	161,740
FGR	484	55		266	22,957
FOP	72	30		22	1,899
FSP	204	40		82	7,077
PTO	406	5		20	1,726
TOTALS	3,040			2,264	195,399

MARKET ADJUSTMENTS

TYPE	MDL	EFF. AREA	TOT ADJ PTS	EFF. BASE RATE	REPL. COST NEW	AYB	EYB	ECON	FNCT		NORM	% COND
0100	01	2,264	122.9481	132.78	300,614	1996	2000	0	0	0	35.00	65.00

1 SINGLE FAM – 0% - 0 Heated Area: 1874 HX Base Yr

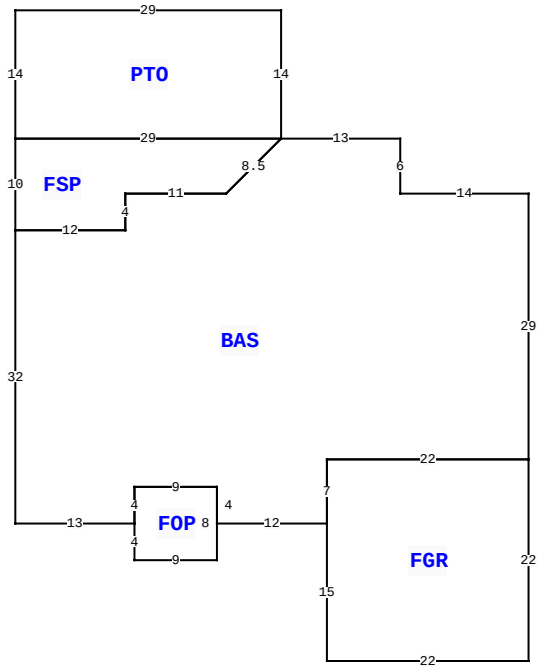

295 SW FANTASY GLN, LAKE CITY

BLD DATE	11/10/1998 DC	LGL DATE	
XF DATE		LAND DATE	04/21/2023 MLU
INC DATE		AG DATE	

VALUATION SUMMARY

VALUATION BY	STANDARD
Tax Group: 3	Tax Dist:
BUILDING MARKET VALUE	195,399
TOTAL MARKET OB/XF VALUE	16,192
TOTAL LAND VALUE - MARKET	18,500
TOTAL MARKET VALUE	230,091
SOH/AGL Deduction	0
ASSESSED VALUE	230,091
TOTAL EXEMPTION VALUE	0
BASE TAXABLE VALUE	230,091
TOTAL JUST VALUE	230,091
NCON VALUE	0
INCOME VALUE	
PREVIOUS YEAR MKT VALUE	226,137

SALE:2:1: UNQ SALE - CO-OWNER SOLD HIS INT TO THE
SALE:1:1: LOT 10 MEADOW VISTA

PERMIT NUM	DESCRIPTION	AMT	ISSUED
11278	SFR	310	06/13/1996

SALES DATA

OFF RECORD Number	DATE	TYPE INST	Q U	V I	RSN CD	SALE PRICE
1210/2416	3/04/2011	WD	Q	I	01	186,000
GRANTOR: ANDREW D & CAROLE G R						
GRANTEE: EARL W & DEBRA E WA						
1050/2186	5/19/2005	WD	Q	I		190,000
GRANTOR: MCGUILL						
GRANTEE: REGAN						

BUILDING NOTES

BUILDING DIMENSIONS

BAS= W14 N6 W13 PTO= N14 W29S14 E29$ FSP= W29 S10 E12 N4 E11 R6 U6 $ D6 L6 W11 S4 W12 S32 E13 FOP= S4 E9 N8 W9 S4$ N4 E9 S4 E12 FGR= S15 E22 N22W22 S7$ N7 E22 N29$.

EXTRA FEATURES

LN	OB/XF CODE	DESCRIPTION	BLD	CAP	L	W	UNITS	UT	Adj R	ADJ UNIT PRICE	ORIG COND	YEAR ON	YEAR ACTUAL	Q	% COND	OB/XF MKT VALUE	NOTES
1	0166	CONC,PAVMT	0	0	0	0	2,135.00	UT	2.00	2.00	100	1996	1996	3	100	4,270	
2	0296	SHED METAL	0	0	6	8	48.00	UT	5.00	5.00	100	1996	1996	3	100	240	
3	0296	SHED METAL	0	0	12	24	288.00	UT	12.00	12.00	100	2007	2007	3	100	3,456	
4	0070	CARPORT UF	0	0	18	20	360.00	UT	2.50	2.50	100	2007	2007	3	100	900	
5	0190	FPLC PF	0	0	0	0	1.00	UT	1,200.00	1,200.00	100	2007	2007	3	100	1,200	
6	0169	FENCE/WOOD	0	0	0	0	1.00	UT	0.00	0.00	100	2007	2007	3	100	3,726	
7	0120	CLFENCE 4	0	0	0	0	320.00	UT	7.50	7.50	100	2007	2007	3	100	2,400	

LAND DESCRIPTION

TOTAL OB/XF 16,192

LN	USE CODE	CLS	LAND USE DESCRIPTION	CAP	RD	LOC ZONE	FRONT	DEPTH	TOT LND UTS	UNIT TYPE	DT	DPTH FACT	% COND	TOT ADJ	UNIT PRICE	ADJ UNIT PRICE	LAND VALUE	OTHER ADJUSTMENTS AND NOTES	YEAR	DENSITY	DECL	FRZ	YR	CONSRV
1	0100	C	SFR	0		00	0.00	0.00	1.00	LT		1.00	1.00	1.00	18,500.00	18,500.00	18,500							

REVIEW DATE 07/29/2024 BY KS Total Acres: 1.10 Total Land Value: 18,500 Market: 0 Agricultural: 0 Common: 18,500 PRINTED 05/09/2025 BY SYS