LOT 2 MEADOW VISTA S/D.
803-1448, 960-402, 404, WD 1029-

BRYAN MARTHA J/WASHNOCK RALPH E
143 SW FANTASY GLN
LAKE CITY, FL 320025

2026

16-4S-16-03025-102

COLUMBIA COUNTY PROPERTY

BUILDING CHARACTERISTICS

ELEMENT	CD	CONSTRUCTION
Exterior Wall	16	WD FR STUC 100
Roof Structur	03	GABLE/HIP 100
Roof Cover	03	COMP SHNGL 100
Interior Wall	05	DRYWALL 100
Interior Floo	14	CARPET 80
Interior Floo	15	HARDTILE 20
Air Condition	03	CENTRAL 100
Heating Type	04	AIR DUCTED 100
Bedrooms		4 100
Bathrooms		3 100
Frame	02	WOOD FRAME 100
Stories	1.	1. 100
Architectual	05	CONV 100
Units		0 100
Condition Adj	03	03 100
Kitchen Adjus	01	01 100
Quality	06	06
DOR CODE	0100	SINGLE FAMILY
MAP NUM		MKT AREA 06
NEIGHBORHOOD/LOC	16416.030	1.00/

AREA TYPE	TOTAL GROSS AREA	PCT OF BASE	YEAR	TOT ADJ AREA	SUBAREA MARKET VALUE
BAS	2,302	100		2,302	191,703
FCP	288	25		72	5,996
FDG	576	60		346	28,813
FGR	484	55		266	22,151
FOP	50	30		15	1,249
FSP	181	40		72	5,996
USP	468	35		164	13,657
TOTALS	4,349			3,237	269,567

MARKET ADJUSTMENTS

TYPE	MDL	EFF. AREA	TOT ADJ PTS	EFF. BASE RATE	REPL. COST NEW	AYB	EYB	ECON	FNCT		NORM	% COND
0100	01	3,237	113.5155	127.14	411,552	2002	2002	0	0	0	34.50	65.50

1 SINGLE FAM 100% - 2021 Heated Area: 2302 HX Base Yr 2021

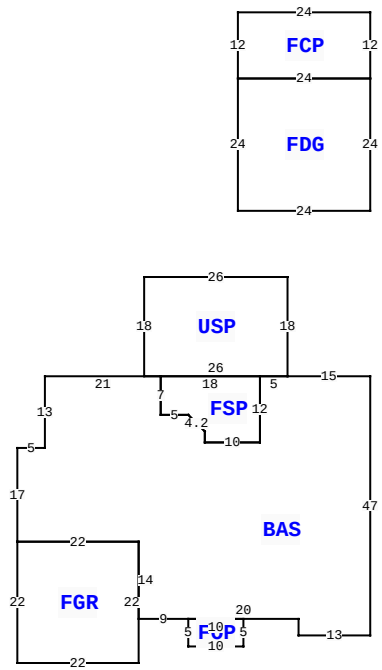

143 SW FANTASY GLN, LAKE CITY

BLD DATE		LGL DATE	
XF DATE		LAND DATE	04/21/2023 MLU
INC DATE		AG DATE	

VALUATION SUMMARY

VALUATION BY		STANDARD
Tax Group: 3	Tax Dist:	
BUILDING MARKET VALUE		269,567
TOTAL MARKET OB/XF VALUE		5,970
TOTAL LAND VALUE - MARKET		18,500
TOTAL MARKET VALUE		294,037
SOH/AGL Deduction		80,581
ASSESSED VALUE		213,456
TOTAL EXEMPTION VALUE	HX HB	50,722
BASE TAXABLE VALUE		162,734
TOTAL JUST VALUE		294,037
NCON VALUE		0
INCOME VALUE		
PREVIOUS YEAR MKT VALUE		300,210

PRCL:0:27: HERE. SHE IS AWARE BOTH WILL HAVE TO CO

LAND:1:1: 1.00 AC

PERMIT NUM	DESCRIPTION	AMT	ISSUED
24287	GARAGE	135	03/23/2006
20693	ADDN SFR	50	05/13/2003

SALES DATA

OFF RECORD Number	DATE	TYPE INST	Q U	V I	RSN CD	SALE PRICE
1414/1857	7/02/2020	WD	Q	I	01	225,000
GRANTOR: DANIEL ALLAN HAHN						
GRANTEE: MARTHA J BRYAN & RA						
1297/0969	7/01/2015	LE	U	I	30	100
GRANTOR: DENISE A HAHN (RESER						
GRANTEE: DANIEL ALLEN HAHN R						

BUILDING NOTES

BUILDING DIMENSIONS

BAS= W15 USP= N18 W26 S18 E26$ W5 FSP= W18 S7 E5 D3 R3 S2 E10 N12$ S12 W10 N2 L3 U3 W5 N7 W21 S13 W5 S17 FGR= S22 E22 N22 W22$ E22 S14 E9 FOP= S5 E10 N5 W10$ E20 S3 E13 N47$ PTR= N30 FDG= N24 FCP= N12 W24 S12 E24$ W24 S24 E24$ S30$.

EXTRA FEATURES

LN	OB/XF CODE	DESCRIPTION	BLD	CAP	L	W	UNITS	UT	Adj R	ADJ UNIT PRICE	ORIG COND	YEAR ON	YEAR ACTUAL	Q	% COND	OB/XF MKT VALUE	NOTES
1	0166	CONC,PAVMT	0	100	0	0	2,085.00	UT	2.00	2.00	100	2002	2002	3	100	4,170	
2	0296	SHED METAL	0	100	0	0	1.00	UT	0.00	0.00	100	2007	2007	3	100	1,200	
3	0070	CARPORT UF	0	100	0	0	1.00	UT	0.00	0.00	100	2014	2014	3	100	600	

LAND DESCRIPTION

TOTAL OB/XF 5,970

LN	USE CODE	CLS	LAND USE DESCRIPTION	CAP	RD	LOC ZONE	FRONT	DEPTH	TOT LND UTS	UNIT TYPE	DT	DPTH FACT	% COND	TOT ADJ	UNIT PRICE	ADJ UNIT PRICE	LAND VALUE	OTHER ADJUSTMENTS AND NOTES	YEAR	DENSITY	DECL	FRZ	YR	CONSRV
1	0100	C	SFR	100		00	0.00	0.00	1.00	LT		1.00	1.00	1.00	18,500.00	18,500.00	18,500							

REVIEW DATE 07/25/2024 BY KS Total Acres: 1.00 Total Land Value: 18,500 Market: 0 Agricultural: 0 Common: 18,500 PRINTED 11/18/2025 BY SYS