NE1/4 OF SW1/4, EX 3 AC IN SE CO
OF NW1/4 OF SW1/4 EX RD R/W DESC
1509-1257.

A M E CHURCH PROPERTY
519 SW L M AARON DR
LAKE CITY, FL 32025

2025

15-5S-17-09257-000

COLUMBIA COUNTY PROPERTY

BUILDING CHARACTERISTICS

ELEMENT	CD	CONSTRUCTION
Exterior Wall	15	CONC BLOCK 100
Roof Structur	03	GABLE/HIP 100
Roof Cover	01	MINIMUM 100
Interior Wall	04	PLYWOOD 100
Interior Floo	09	PINE WOOD 100
Ceiling	02	F.NOT SUS 100
Air Condition	03	CENTRAL 100
Heating Type	02	CONVECTION 100
Fixtures		6 100
Frame	03	MASONRY 100
Story Height		8 100
RMS		10 100
Stories	0	0 100
Units		0 100
Condition Adj	03	03 100
Quality	05	05

DOR CODE	7100	CHURCHES-EX	
MAP NUM		MKT AREA	02
NEIGHBORHOOD/LOC	15517.00	1.00/	

AREA TYPE	TOTAL GROSS AREA	PCT OF BASE	YEAR	TOT ADJ AREA	SUBAREA MARKET VALUE
BAS	156	100		156	4,420
BAS	514	100		514	14,562
BAS	620	100		620	17,565
BAS	1,740	100		1,740	49,294
CAN	64	30		19	539
CAN	80	30		24	680
TOTALS	3,174			3,073	87,058

MARKET ADJUSTMENTS

TYPE	MDL	EFF. AREA	TOT ADJ PTS	EFF. BASE RATE	REPL. COST NEW	AYB	EYB	ECON	FNCT		NORM	% COND
9100	04	3,073	73.5904	56.66	174,116	1950	1950	0	0	0	50.00	50.00

1 CHURCH 0% - 0 Heated Area: 3030 HX Base Yr

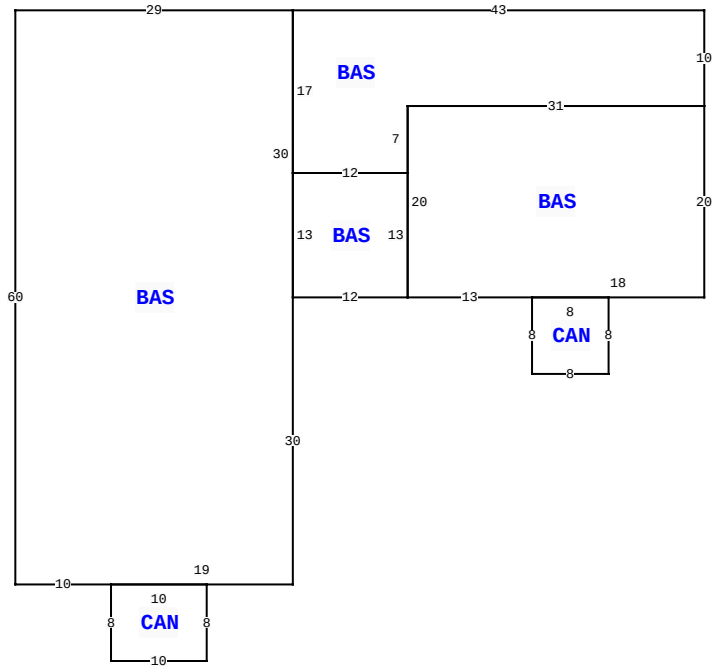

330 SW LM AARON DR, LAKE CITY

BLD DATE		LGL DATE	
XF DATE		LAND DATE	03/23/2022 MLU
INC DATE		AG DATE	

VALUATION SUMMARY

VALUATION BY		STANDARD
Tax Group: 3	Tax Dist:	
BUILDING MARKET VALUE		87,058
TOTAL MARKET OB/XF VALUE		9,200
TOTAL LAND VALUE - MARKET		139,440
TOTAL MARKET VALUE		235,698
SOH/AGL Deduction		0
ASSESSED VALUE		235,698
TOTAL EXEMPTION VALUE	02	235,698
BASE TAXABLE VALUE		0
TOTAL JUST VALUE		235,698
NCON VALUE		0
INCOME VALUE		
PREVIOUS YEAR MKT VALUE		233,440

PERMIT NUM	DESCRIPTION	AMT	ISSUED
000049448	Roof Replacement	13,000	03/18/2024

SALES DATA

OFF RECORD Number	DATE	TYPE INST	Q U /	V I /	RSN CD	SALE PRICE

BUILDING NOTES

BUILDING DIMENSIONS

BAS= W29 S60 E10 CAN= S8 E10 N8 W10$ E19 N30 BAS= E12 BAS= E13 CAN= S8 E8 N8 W8$ E18 N20 BAS= N10 W43 S17 E12 N7 E31$ W31 S20$ N13 W12 S13$ N30$.

EXTRA FEATURES

LN	OB/XF CODE	DESCRIPTION	BLD	CAP	L	W	UNITS	UT	Adj R	ADJ UNIT PRICE	ORIG COND	YEAR ON	YEAR ACTUAL	Q	% COND	OB/XF MKT VALUE	NOTES
1	0040	BARN,POLE	0	0	0	0	1.00	UT	0.00	0.00	100	2012	2012	3	100	500	
2	0070	CARPORT UF	0	0	0	0	1.00	UT	0.00	0.00	100	2012	2012	3	100	1,200	
3	9945	Well/Sept	0	0	0	0	1.00	UT	7,000.00	7,000.00	100			3	100	7,000	
4	0255	MBL HOME S	0	0	0	0	1.00	UT	0.00	0.00	100	2017	2017	3	100	500	

LAND DESCRIPTION

TOTAL OB/XF 9,200

LN	USE CODE	CLS	LAND USE DESCRIPTION	CAP	RD	LOC ZONE	FRONT	DEPTH	TOT LND UTS	UNIT TYPE	DT	DPTH FACT	% COND	TOT ADJ	UNIT PRICE	ADJ UNIT PRICE	LAND VALUE	OTHER ADJUSTMENTS AND NOTES	YEAR	DENSITY	DECL	FRZ	YR	CONSRV
1	7100	C	CHURCH	0		A-1	0.00	0.00	34.86	AC		1.00	1.00	1.00	4,000.00	4,000.00	139,440							

REVIEW DATE 08/04/2017 BY DF Total Acres: 34.86 Total Land Value: 139,440 Market: 0 Agricultural: 0 Common: 139,440 PRINTED 08/15/2025 BY SYS