LOT 14 GLENWOOD S/D.

455-451, 814-1502, 835-1258, 955

KNIGHT MARY
346 SE SANDIA WAY
LAKE CITY, FL 32025

2026

15-4S-17-08360-264

BUILDING CHARACTERISTICS

ELEMENT	CD	CONSTRUCTION
Exterior Wall	19	COMMON BRK 100
Roof Structur	03	GABLE/HIP 100
Roof Cover	03	COMP SHNGL 100
Interior Wall	05	DRYWALL 100
Interior Floo	14	CARPET 90
Interior Floo	08	SHT VINYL 10
Air Condition	03	CENTRAL 100
Heating Type	04	AIR DUCTED 100
Bedrooms		3 100
Bathrooms		1 100
Frame	01	NONE 100
Stories	1.	1. 100
Architectual	05	CONV 100
Units		0 100
Condition Adj	03	03 100
Kitchen Adjus	01	01 100
Quality	05	05
DOR CODE	0100	SINGLE FAMILY
MAP NUM		MKT AREA 06
NEIGHBORHOOD/LOC	15417.080	1.00/

AREA TYPE	TOTAL GROSS AREA	PCT OF BASE	YEAR	TOT ADJ AREA	SUBAREA MARKET VALUE
BAS	1,355	100		1,355	108,077
FCP	252	25		63	5,025
FOP	48	30		14	1,117
FSP	276	40		110	8,774
FST	72	55		40	3,190
UCP	231	20		46	3,669
UDU	96	55		53	4,228
UDU	144	55		79	6,301
TOTALS	2,474			1,760	140,380

MARKET ADJUSTMENTS

TYPE	MDL	EFF. AREA	TOT ADJ PTS	EFF. BASE RATE	REPL. COST NEW	AYB	EYB	ECON	FNCT		NORM	% COND
0100	01	1,760	109.5640	122.71	215,970	1980	1980	0	0	0	35.00	65.00

1 SINGLE FAM 100% - 2022 Heated Area: 1355 HX Base Yr 2022

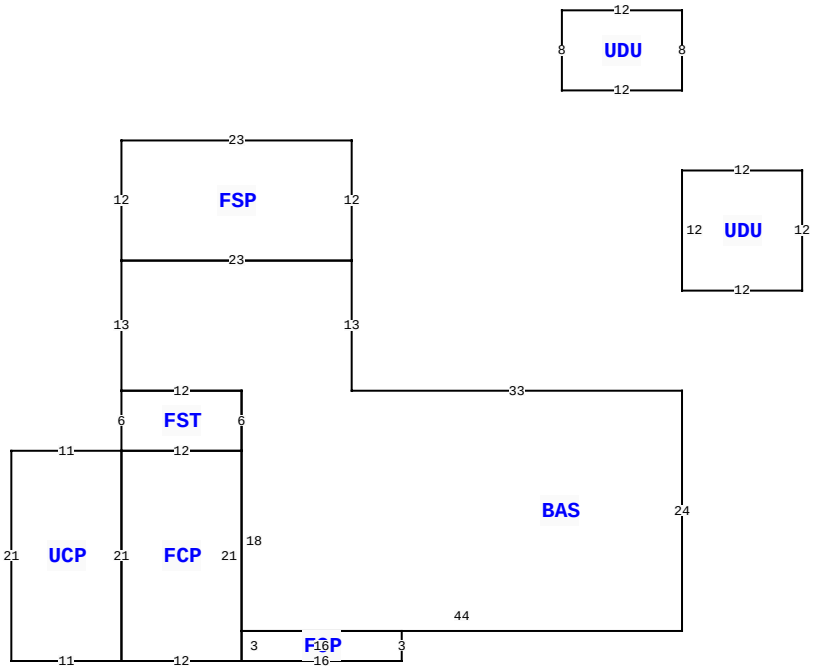

346 SE SANDIA WAY, LAKE CITY

BLD DATE		LGL DATE	
XF DATE		LAND DATE	04/21/2023 MLU
INC DATE		AG DATE	

COLUMBIA COUNTY PROPERTY

PAGE 1 of 1 2

VALUATION SUMMARY

VALUATION BY		STANDARD
Tax Group: 2	Tax Dist:	
BUILDING MARKET VALUE		140,380
TOTAL MARKET OB/XF VALUE		3,687
TOTAL LAND VALUE - MARKET		18,500
TOTAL MARKET VALUE		162,567
SOH/AGL Deduction		24,576
ASSESSED VALUE		137,991
TOTAL EXEMPTION VALUE	HX HB	50,722
BASE TAXABLE VALUE		87,269
TOTAL JUST VALUE		162,567
NCON VALUE		0
INCOME VALUE		
PREVIOUS YEAR MKT VALUE		162,567

PERMIT NUM	DESCRIPTION	AMT	ISSUED

SALES DATA

OFF RECORD Number	DATE	TYPE INST	Q U	V I	RSN CD	SALE PRICE
1452/100	11/08/2021	WD	Q	I	01	125,000
GRANTOR: CROFT NELSON						
GRANTEE: KNIGHT MARY						
1432/722	7/06/2020	QC	U	I	11	100
GRANTOR: LEE KAREN SMITH FKA K						
GRANTEE: CROFT NELSON						

BUILDING NOTES

BUILDING DIMENSIONS

BAS= W33 N13 FSP= N12 W23 S12 E23$ W23 S13 FST= S6E12 N6 W12$ E12 S6 FCP= W12 UCP= W11 S21 E11 N21$ S21 E12N21$ S18 FOP= S3 E16 N3 W16$E44 N24$PTR= N10 UDU= E12 N12 W12 S12$ S10 PTR= N30 UDU= N8 W12 S8 E12$ S30$.

EXTRA FEATURES

LN	OB/XF CODE	DESCRIPTION	BLD	CAP	L	W	UNITS	UT	Adj R	ADJ UNIT PRICE	ORIG COND	YEAR ON	YEAR ACTUAL	Q	% COND	OB/XF MKT VALUE	NOTES
1	0166	CONC,PAVMT	0	100	0	0	1.00	UT	0.00	0.00	100	1993	1993	3	100	2,287	
2	0120	CLFENCE 4	0	100	0	0	560.00	UT	2.50	2.50	100	1993	1993	3	100	1,400	

LAND DESCRIPTION

TOTAL OB/XF 3,687

LN	USE CODE	CLS	LAND USE DESCRIPTION	CAP	RD	LOC ZONE	FRONT	DEPTH	TOT LND UTS	UNIT TYPE	DT	DPTH FACT	% COND	TOT ADJ	UNIT PRICE	ADJ UNIT PRICE	LAND VALUE	OTHER ADJUSTMENTS AND NOTES	YEAR	DENSITY	DECL	FRZ	YR	CONSRV
1	0100	C	SFR	100		RSF-1	0.00	0.00	1.00	LT		1.00	1.00	1.00	18,500.00	18,500.00	18,500							

REVIEW DATE 04/24/2017 BY BC Total Acres: 0.56 Total Land Value: 18,500 Market: 0 Agricultural: 0 Common: 18,500 PRINTED 11/07/2025 BY SYS