LOT 12 ROLLING HILLS S/D.

LE 1426-2697

COLEMAN ALLEN D/COLEMAN CHING PING
385 SW ARLINGTON BLVD
LAKE CITY, FL 32025-5607

2026

15-4S-17-08360-212

COLUMBIA COUNTY PROPERTY

BUILDING CHARACTERISTICS

ELEMENT	CD	CONSTRUCTION
Exterior Wall	19	COMMON BRK 80
Exterior Wall	31	VINYL SID 20
Roof Structur	03	GABLE/HIP 100
Roof Cover	03	COMP SHNGL 100
Interior Wall	05	DRYWALL 100
Interior Floo	14	CARPET 90
Interior Floo	06	VINYL ASB 10
Air Condition	03	CENTRAL 100
Heating Type	04	AIR DUCTED 100
Bedrooms		5 100
Bathrooms		4 100
Frame	01	NONE 100
Stories	1.5	1.5 100
Architectual	05	CONV 100
Units		0 100
Condition Adj	03	03 100
Kitchen Adjus	01	01 100
Quality	07	07
DOR CODE	0100	SINGLE FAMILY
MAP NUM		MKT AREA 06
NEIGHBORHOOD/LOC	15417.070	1.00/

AREA TYPE	TOTAL GROSS AREA	PCT OF BASE	YEAR	TOT ADJ AREA	SUBAREA MARKET VALUE
BAS	96	100		96	8,761
BAS	120	100		120	10,952
BAS	2,709	100		2,709	247,241
FGR	560	55		308	28,110
FSP	144	40		58	5,294
FUS	700	100		700	63,887
PTO	280	5		14	1,278
TOTALS	4,609			4,005	365,522

MARKET ADJUSTMENTS

TYPE	MDL	EFF. AREA	TOT ADJ PTS	EFF. BASE RATE	REPL. COST NEW	AYB	EYB	ECON	FNCT		NORM	% COND
0100	01	4,005	125.3672	140.41	562,342	1988	1988	0	0	0	35.00	65.00

1 SINGLE FAM 100% - 0 Heated Area: 3625 HX Base Yr

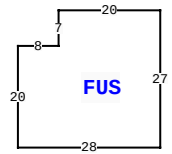

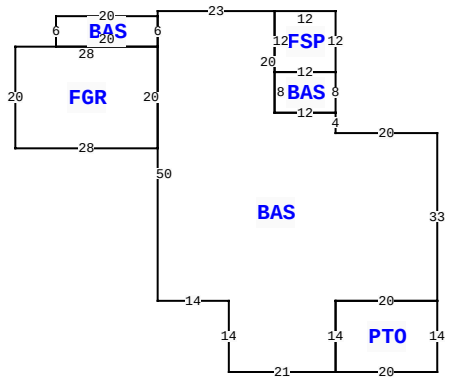

217 SE HUBBLE ST, LAKE CITY

BLD DATE		LGL DATE	
XF DATE		LAND DATE	04/21/2023 MLU
INC DATE		AG DATE	

VALUATION SUMMARY

VALUATION BY		STANDARD
Tax Group: 2	Tax Dist:	
BUILDING MARKET VALUE		365,522
TOTAL MARKET OB/XF VALUE		15,232
TOTAL LAND VALUE - MARKET		18,500
TOTAL MARKET VALUE		399,254
SOH/AGL Deduction		145,403
ASSESSED VALUE		253,851
TOTAL EXEMPTION VALUE	HX HB	50,722
BASE TAXABLE VALUE		203,129
TOTAL JUST VALUE		399,254
NCON VALUE		0
INCOME VALUE		
PREVIOUS YEAR MKT VALUE		399,254

PERMIT NUM	DESCRIPTION	AMT	ISSUED
32353	MAINT/ALTR	0	10/02/2014
18899	ADDN SFR	143	10/29/2001
18546	ADDN SFR	95	07/25/2001

SALES DATA

OFF RECORD Number	DATE	TYPE INST	Q U /	V I /	RSN CD	SALE PRICE
1426/2697	9/16/2020	LE	U	I	14	100
GRANTOR: COLEMAN ALLEN D						
GRANTEE: COLEMAN FAMILY REVO						
0545/0739	8/01/1984	WD	Q	V		6,000
GRANTOR:						
GRANTEE:						

BUILDING NOTES

BUILDING DIMENSIONS

BAS= W23 S1 BAS= W20 S6 E20 N6$ S6 FGR= W28 S20 E28 N20$ S50E14 S14 E21 PTO= E20 N14 W20 S14$ N14 E20 N33 W20 N4 BAS= N8 FSP= N12 W12 S12 E12$ W12 S8 E12$ W12 N20$ PTR= N30 E40 FUS= E28 N27 W20 S7 W8 S20$ S30 W40 $.

EXTRA FEATURES

LN	OB/XF CODE	DESCRIPTION	BLD	CAP	L	W	UNITS	UT	Adj R	ADJ UNIT PRICE	ORIG COND	YEAR ON	YEAR ACTUAL	Q	% COND	OB/XF MKT VALUE	NOTES
1	0166	CONC,PAVMT	0	100	0	0	1.00	UT	0.00	0.00	100	0	0	3	100	1,732	
2	0264	PRCH,FSP	0	100	0	0	1.00	UT	0.00	0.00	100	2001	2001	3	100	12,000	
3	0260	PAVEMENT-A	0	100	0	0	1.00	UT	0.00	0.00	100	2004	2004	3	100	1,500	

LAND DESCRIPTION

TOTAL OB/XF 15,232

LN	USE CODE	CLS	LAND USE DESCRIPTION	CAP	RD	LOC ZONE	FRONT	DEPTH	TOT LND UTS	UNIT TYPE	DT	DPTH FACT	% COND	TOT ADJ	UNIT PRICE	ADJ UNIT PRICE	LAND VALUE	OTHER ADJUSTMENTS AND NOTES	YEAR	DENSITY	DECL	FRZ	YR	CONSRV
1	0100	C	SFR	100		A-1	0.00	0.00	1.00	LT		1.00	1.00	1.00	18,500.00	18,500.00	18,500							

REVIEW DATE 04/24/2017 BY BC Total Acres: 0.62 Total Land Value: 18,500 Market: 0 Agricultural: 0 Common: 18,500 PRINTED 11/18/2025 BY SYS