BEG NW COR OF SE1/4 OF NW1/4,
E 456.49 FT, S 48 DEG E 174.54
FT, S 41 DEG W 215.99 FT, S

HEDMAN GUNARD E/HEDMAN CARLA J
3462 SW STATE ROAD 247
LAKE CITY, FL 32024

2026

15-4S-16-03005-000

COLUMBIA COUNTY PROPERTY

BUILDING CHARACTERISTICS

ELEMENT	CD	CONSTRUCTION
Exterior Wall	15	CONC BLOCK 50
Exterior Wall	16	WD FR STUC 50
Roof Structur	08	IRREGULAR 100
Roof Cover	03	COMP SHNGL 100
Interior Wall	05	DRYWALL 100
Interior Floo	13	LAM/VNLPLK 100
Air Condition	03	CENTRAL 100
Heating Type	04	AIR DUCTED 100
Bedrooms		3 100
Bathrooms		2 100
Frame	01	NONE 100
Stories	1.5	1.5 100
Architectual	05	CONV 100
Units		0 100
Condition Adj	03	03 100
Kitchen Adjus	01	01 100
Quality	05	05
DOR CODE	0100	SINGLE FAMILY
MAP NUM		MKT AREA 06
NEIGHBORHOOD/LOC	15416.00	1.00/

AREA TYPE	TOTAL GROSS AREA	PCT OF BASE	YEAR	TOT ADJ AREA	SUBAREA MARKET VALUE
BAS	300	100		300	28,488
BAS	1,542	100		1,542	146,429
FST	64	55		35	3,323
PTO	482	5		24	2,279
UOP	16	20		3	285
UST	104	45		47	4,463
TOTALS	2,508			1,951	185,268

MARKET ADJUSTMENTS

TYPE	MDL	EFF. AREA	TOT ADJ PTS	EFF. BASE RATE	REPL. COST NEW	AYB	EYB	ECON	FNCT		NORM	% COND
0100	01	1,951	116.9438	130.98	255,542	1956	2005	0	0	0	27.50	72.50

1 SINGLE FAM 100% - 2020 Heated Area: 1842 HX Base Yr 2020

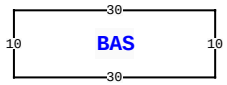

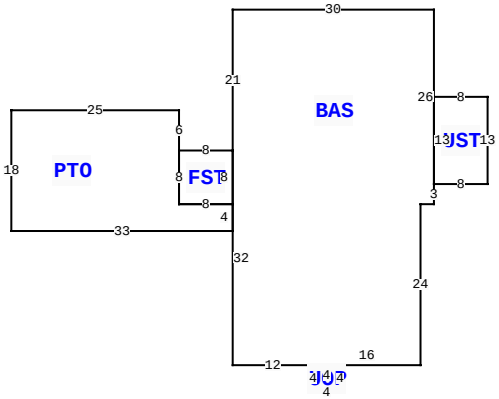

3462 SW STATE ROAD 247 , LAKE CITY

BLD DATE		LGL DATE	
XF DATE		LAND DATE	04/10/2025 MLU
INC DATE		AG DATE	

VALUATION SUMMARY

VALUATION BY		STANDARD
Tax Group: 3	Tax Dist:	
BUILDING MARKET VALUE		185,268
TOTAL MARKET OB/XF VALUE		4,525
TOTAL LAND VALUE - MARKET		56,880
TOTAL MARKET VALUE		246,673
SOH/AGL Deduction		60,436
ASSESSED VALUE		186,237
TOTAL EXEMPTION VALUE	HX HB	50,722
BASE TAXABLE VALUE		135,515
TOTAL JUST VALUE		246,673
NCON VALUE		0
INCOME VALUE		
PREVIOUS YEAR MKT VALUE		250,174

PERMIT NUM	DESCRIPTION	AMT	ISSUED

SALES DATA

OFF RECORD Number	DATE	TYPE INST	Q U	V I	RSN CD	SALE PRICE
1383/0464	4/25/2019	WD	Q	I	01	170,000
GRANTOR: AUSTIN C BROOKS						
GRANTEE: GUNARD E & CARLA J						
1302/1050	10/09/2015	WD	U	I	16	33,400
GRANTOR: RHONDA M WAINWRIGHT						
GRANTEE: AUSTIN C BROOKS						

BUILDING NOTES

BUILDING DIMENSIONS

BAS= W30 S21 FST= W8 PTO= N6 W25 S18 E33 N4 W8 N8$ S8 E8N8$ S32 E12 UOP= S4 E4 N4 W4$E16 N24 E2 N3 UST= E8 N13 W8 S13$ N26$ PTR=N30 BAS= E30 N10 W30 S10$ S30$.

EXTRA FEATURES

LN	OB/XF CODE	DESCRIPTION	BLD	CAP	L	W	UNITS	UT	Adj R	ADJ UNIT PRICE	ORIG COND	YEAR ON	YEAR ACTUAL	Q	% COND	OB/XF MKT VALUE	NOTES
1	0294	SHED WOOD/	0	100	10	12	1.00	UT	0.00	0.00	100	2014	2014	3	100	225	
2	0169	FENCE/WOOD	0	100	0	0	1.00	UT	0.00	0.00	100	2019	2019	3	100	2,500	
3	0080	DECKING	0	100	0	0	1.00	UT	0.00	0.00	100	2019	2019	3	100	1,000	
4	0296	SHED METAL	0	100	0	0	1.00	UT	0.00	0.00	100	2019	2019	3	100	800	

LAND DESCRIPTION

TOTAL OB/XF 4,525

LN	USE CODE	CLS	LAND USE DESCRIPTION	CAP	RD	LOC ZONE	FRONT	DEPTH	TOT LND UTS	UNIT TYPE	DT	DPTH FACT	% COND	TOT ADJ	UNIT PRICE	ADJ UNIT PRICE	LAND VALUE	OTHER ADJUSTMENTS AND NOTES	YEAR	DENSITY	DECL	FRZ	YR	CONSRV
1	0100	C	SFR	100		00	0.00	0.00	6.32	AC		1.00	1.00	1.00	9,000.00	9,000.00	56,880							

REVIEW DATE 09/24/2024 BY KS Total Acres: 6.32 Total Land Value: 56,880 Market: 0 Agricultural: 0 Common: 56,880 PRINTED 11/05/2025 BY SYS