COMM NE COR OF NE1/4 OF SW1/4, R
FOR POB, CONT S 213 FT, W 275 FT
W 804.78 FT, N 304.94 FT, E 97.5

ROBERTS DEBBIE
570 SW NURSERY RD
LAKE CITY, FL 32024

2026

15-4S-16-03002-002

COLUMBIA COUNTY PROPERTY

BUILDING CHARACTERISTICS

ELEMENT	CD	CONSTRUCTION
Exterior Wall	32	HARDIE BRD 80
Exterior Wall	21	STONE 20
Roof Structur	08	IRREGULAR 100
Roof Cover	03	COMP SHNGL 100
Interior Wall	05	DRYWALL 100
Interior Floo	15	HARDTILE 80
Interior Floo	14	CARPET 20
Air Condition	03	CENTRAL 100
Heating Type	04	AIR DUCTED 100
Bedrooms		5 100
Bathrooms		4 100
Frame	02	WOOD FRAME 100
Stories	1.	1. 100
Architectual	05	CONV 100
Units		0 100
Quality	07	07
DOR CODE	0100	SINGLE FAMILY
MAP NUM		MKT AREA 06
NEIGHBORHOOD/LOC	15416.00	1.00/

AREA TYPE	TOTAL GROSS AREA	PCT OF BASE	YEAR	TOT ADJ AREA	SUBAREA MARKET VALUE
BAS	2,319	100		2,319	278,144
FGR	936	55		515	61,770
FOP	94	30		28	3,359
FSP	520	40		208	24,948
FUS	1,200	100		1,200	143,930
TOTALS	5,069			4,270	512,150

MARKET ADJUSTMENTS

TYPE	MDL	EFF. AREA	TOT ADJ PTS	EFF. BASE RATE	REPL. COST NEW	AYB	EYB	ECON	FNCT		NORM	% COND
0100	01	4,270	130.6008	146.27	624,573	2007	2007	0	0	0	18.00	82.00

1 SINGLE FAM 100% - 2024 Heated Area: 3519 HX Base Yr 2024

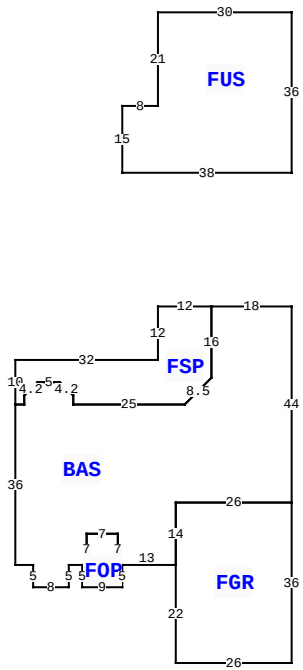

570 SW NURSERY RD, LAKE CITY

BLD DATE		LGL DATE	
XF DATE		LAND DATE	04/09/2025 MLU
INC DATE		AG DATE	

VALUATION SUMMARY

VALUATION BY		STANDARD
Tax Group: 3	Tax Dist:	
BUILDING MARKET VALUE		512,150
TOTAL MARKET OB/XF VALUE		13,648
TOTAL LAND VALUE - MARKET		74,070
TOTAL MARKET VALUE		599,868
SOH/AGL Deduction		16,123
ASSESSED VALUE		583,745
TOTAL EXEMPTION VALUE	HX HB	50,722
BASE TAXABLE VALUE		533,023
TOTAL JUST VALUE		599,868
NCON VALUE		0
INCOME VALUE		
PREVIOUS YEAR MKT VALUE		606,114

PERMIT NUM	DESCRIPTION	AMT	ISSUED
24918	SFR	1,040	08/25/2006

SALES DATA

OFF RECORD Number	DATE	TYPE INST	Q U	V I	RSN CD	SALE PRICE
1443/2634	7/29/2021	WD	Q	I	01	500,000
GRANTOR: PIERCE TIMOTHY R						
GRANTEE: ROBERTS DEBBIE						
1067/2672	12/09/2005	WD	Q	V		75,000
GRANTOR: RICHARD ROSE						
GRANTEE: TIMOTHY AND TERESA						

BUILDING NOTES

BUILDING DIMENSIONS

BAS= W18 FSP= W12 S12 W32 S10 E2 N2 R3 U3 E5 D3 R3 S2 E25 R6 U6 N16$ S16 D6 L6 W25 N2 L3 U3 W5 D3 L3 S2 W2 S36 E4 S5 E8 N5 E3 FOP= S5 E9 N5 W1 N7 W7 S7 W1$ E1 N7 E7 S7 E13 FGR= S22 E26 N36 W26 S14$ N14 E26 N44$ PTR= N30 FUS= N36 W30 S21 W8 S15 E38$ S30$.

EXTRA FEATURES

LN	OB/XF CODE	DESCRIPTION	BLD	CAP	L	W	UNITS	UT	Adj R	ADJ UNIT PRICE	ORIG COND	YEAR ON	YEAR ACTUAL	Q	% COND	OB/XF MKT VALUE	NOTES
1	0180	FPLC 1STRY	0	100	0	0	1.00	UT	2,000.00	2,000.00	100	2007	2007	3	100	2,000	
2	0030	BARN,MT	0	100	18	25	450.00	UT	12.00	12.00	100	2007	2007	3	100	5,400	
3	0251	LEAN TO W/	0	100	12	25	300.00	UT	5.00	5.00	100	2007	2007	3	100	1,500	
4	0166	CONC,PAVMT	0	100	0	0	1,316.00	UT	3.00	3.00	100	2007	2007	3	100	3,948	
5	0070	CARPORT UF	0	100	24	25	1.00	UT	0.00	0.00	100	2019	2019	3	100	800	

LAND DESCRIPTION

TOTAL OB/XF 13,648

LN	USE CODE	CLS	LAND USE DESCRIPTION	CAP	RD	LOC ZONE	FRONT	DEPTH	TOT LND UTS	UNIT TYPE	DT	DPTH FACT	% COND	TOT ADJ	UNIT PRICE	ADJ UNIT PRICE	LAND VALUE	OTHER ADJUSTMENTS AND NOTES	YEAR	DENSITY	DECL	FRZ	YR	CONSRV
1	0100	C	SFR	100		00	0.00	0.00	8.23	AC		1.00	1.00	1.00	9,000.00	9,000.00	74,070							

REVIEW DATE 09/20/2024 BY KS Total Acres: 8.23 Total Land Value: 74,070 Market: 0 Agricultural: 0 Common: 74,070 PRINTED 11/05/2025 BY SYS