LOT 5 BLOCK C FOREST COUNTRY 3RD

ORB 830-2514,

SAUCER LAWRENCE H/SAUCER JENNIFER J
307 SW BLACK PINE TERRACE
LAKE CITY, FL 32024

2026

15-4S-16-03000-145

COLUMBIA COUNTY PROPERTY

BUILDING CHARACTERISTICS

ELEMENT	CD	CONSTRUCTION
Exterior Wall	31	VINYL SID 80
Exterior Wall	19	COMMON BRK 20
Roof Structur	08	IRREGULAR 100
Roof Cover	03	COMP SHNGL 100
Interior Wall	05	DRYWALL 100
Interior Floo	14	CARPET 90
Interior Floo	15	HARDTILE 10
Air Condition	03	CENTRAL 100
Heating Type	04	AIR DUCTED 100
Bedrooms		3 100
Bathrooms		2 100
Frame	01	NONE 100
Stories	1.5	1.5 100
Architectual	05	CONV 100
Units		0 100
Condition Adj	03	03 100
Kitchen Adjus	01	01 100
Quality	06	06
DOR CODE	0100	SINGLE FAMILY
MAP NUM		MKT AREA 06
NEIGHBORHOOD/LOC	15416.030	1.00/

AREA TYPE	TOTAL GROSS AREA	PCT OF BASE	YEAR	TOT ADJ AREA	SUBAREA MARKET VALUE
BAS	1,921	100		1,921	164,060
FGR	640	55		352	30,062
FOP	175	30		52	4,441
FOP	244	30		73	6,234
FST	56	55		31	2,647
FUS	392	100		392	33,478
TOTALS	3,428			2,821	240,924

MARKET ADJUSTMENTS

TYPE	MDL	EFF. AREA	TOT ADJ PTS	EFF. BASE RATE	REPL. COST NEW	AYB	EYB	ECON	FNCT		NORM	% COND
0100	01	2,821	114.8364	128.62	362,837	1997	1997	0	0	0	33.60	66.40

1 SINGLE FAM 100% - 1998 Heated Area: 2313 HX Base Yr 1998

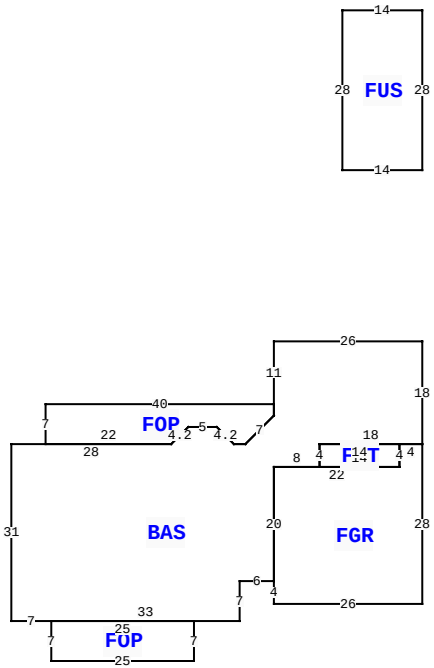

307 SW BLACKPINE TER, LAKE CITY

BLD DATE		LGL DATE	
XF DATE		LAND DATE	04/03/2025 MLU
INC DATE		AG DATE	

VALUATION SUMMARY

VALUATION BY		STANDARD
Tax Group: 3	Tax Dist:	
BUILDING MARKET VALUE		240,924
TOTAL MARKET OB/XF VALUE		2,496
TOTAL LAND VALUE - MARKET		35,000
TOTAL MARKET VALUE		278,420
SOH/AGL Deduction		87,649
ASSESSED VALUE		190,771
TOTAL EXEMPTION VALUE	HX HB	50,722
BASE TAXABLE VALUE		140,049
TOTAL JUST VALUE		278,420
NCON VALUE		0
INCOME VALUE		
PREVIOUS YEAR MKT VALUE		282,774

PERMIT NUM	DESCRIPTION	AMT	ISSUED
12720	SFR	375	07/01/1997

SALES DATA

OFF RECORD Number	DATE	TYPE INST	Q U	V I	RSN CD	SALE PRICE
0830/2514	11/15/1996	WD	Q	I		20,000

GRANTOR: BLONDINA STEVENS

GRANTEE: LAWRENCE H & JENNIF

BUILDING NOTES

BUILDING DIMENSIONS

BAS= W26 S11 FOP= W40 S7 E22 U3 R3 E5 R3 D3 E2 R5 U5 N2$ S2 D5 L5 W2 U3 L3 W5 L3 D3 W28 S31 E7 FOP= S7 E25N7 W25$ E33 N7 E6 FGR= S4 E26N28 W4 S4 W22 S20$ N20 E8 FST= E14 N4 W14 S4$ N4 E18 N18$ PTR= N30 FUS= N28 W14 S28 E14$ S30$.

EXTRA FEATURES

LN	OB/XF CODE	DESCRIPTION	BLD	CAP	L	W	UNITS	UT	Adj R	ADJ UNIT PRICE	ORIG COND	YEAR ON	YEAR ACTUAL	Q	% COND	OB/XF MKT VALUE	NOTES
1	0166	CONC,PAVMT	0	100	0	0	1,664.00	UT	1.50	1.50	100	1997	1997	3	100	2,496	

LAND DESCRIPTION

TOTAL OB/XF 2,496

LN	USE CODE	CLS	LAND USE DESCRIPTION	CAP	RD	LOC ZONE	FRONT	DEPTH	TOT LND UTS	UNIT TYPE	DT	DPTH FACT	% COND	TOT ADJ	UNIT PRICE	ADJ UNIT PRICE	LAND VALUE	OTHER ADJUSTMENTS AND NOTES	YEAR	DENSITY	DECL	FRZ	YR	CONSRV
1	0100	C	SFR	100		RSF-1	0.00	0.00	1.00	LT		1.00	1.00	1.00	35,000.00	35,000.00	35,000							

REVIEW DATE 09/10/2024 BY KS Total Acres: 0.73 Total Land Value: 35,000 Market: 0 Agricultural: 0 Common: 35,000 PRINTED 11/20/2025 BY SYS