LOT 2 BLOCK B FOREST COUNTRY 3RD

WD 845-426, WD 938-764, LE 1087-

HART RHEA B/HART JOAN O
274 SW LOBLOLLY PL
LAKE CITY, FL 32024

2026

15-4S-16-03000-122

COLUMBIA COUNTY PROPERTY

BUILDING CHARACTERISTICS

ELEMENT	CD	CONSTRUCTION
Exterior Wall	19	COMMON BRK 100
Roof Structur	03	GABLE/HIP 100
Roof Cover	03	COMP SHNGL 100
Interior Wall	05	DRYWALL 100
Interior Floo	14	CARPET 90
Interior Floo	15	HARDTILE 10
Air Condition	03	CENTRAL 100
Heating Type	04	AIR DUCTED 100
Bedrooms		3 100
Bathrooms		2.5 100
Frame	02	WOOD FRAME 100
Stories	1.5	1.5 100
Architectual	05	CONV 100
Units		0 100
Condition Adj	03	03 100
Kitchen Adjus	01	01 100
Quality	05	05
DOR CODE	0100	SINGLE FAMILY
MAP NUM		MKT AREA 06
NEIGHBORHOOD/LOC	15416.030	1.00/

AREA TYPE	TOTAL GROSS AREA	PCT OF BASE	YEAR	TOT ADJ AREA	SUBAREA MARKET VALUE
BAS	2,294	100		2,294	220,208
FGR	552	55		304	29,182
FOP	108	30		32	3,072
FSP	370	40		148	14,207
FST	64	55		35	3,360
FST	230	55		126	12,095
PTO	400	5		20	1,920
TOTALS	4,018			2,959	284,042

MARKET ADJUSTMENTS

TYPE	MDL	EFF. AREA	TOT ADJ PTS	EFF. BASE RATE	REPL. COST NEW	AYB	EYB	ECON	FNCT		NORM	% COND
0100	01	2,959	115.8192	129.72	383,841	1999	1999	0	0	0	26.00	74.00

1 SINGLE FAM 100% - 2000 Heated Area: 2294 HX Base Yr 2000

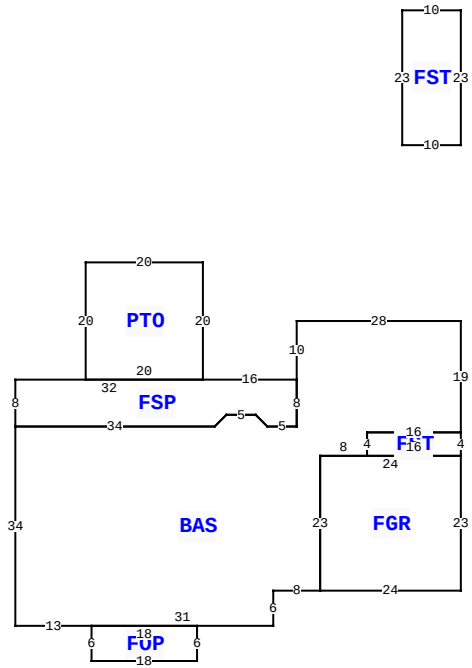

274 SW LOBLOLLY PL, LAKE CITY

BLD DATE		LGL DATE	
XF DATE		LAND DATE	04/03/2025 MLU
INC DATE		AG DATE	

VALUATION SUMMARY

VALUATION BY		STANDARD
Tax Group: 3	Tax Dist:	
BUILDING MARKET VALUE		284,042
TOTAL MARKET OB/XF VALUE		8,456
TOTAL LAND VALUE - MARKET		35,000
TOTAL MARKET VALUE		327,498
SOH/AGL Deduction		108,133
ASSESSED VALUE		219,365
TOTAL EXEMPTION VALUE	HX HB	50,722
BASE TAXABLE VALUE		168,643
TOTAL JUST VALUE		327,498
NCON VALUE		0
INCOME VALUE		
PREVIOUS YEAR MKT VALUE		331,637

PERMIT NUM	DESCRIPTION	AMT	ISSUED
000047571	Roof Replacement	22,620	06/29/2023
041156	ELECTRICAL		01/14/2021
14914	SFR	370	01/06/1999

SALES DATA

OFF RECORD Number	DATE	TYPE INST	Q U	V I	RSN CD	SALE PRICE
1547/2713	8/21/2025	LE	U	I	14	100
GRANTOR: HART RHEA B						
GRANTEE: HART RHEA B (ENH LE						
1496/2014	8/11/2023	LE	U	I	14	100
GRANTOR: HART RHEA B						
GRANTEE: HART RHEA B (ENH LI						

BUILDING NOTES

BUILDING DIMENSIONS

BAS=[ORIG=0,0] W28 S10 S8 W5 U2L2 W5 D2L2 W34 S34 E13 E31 N6 E8 N23 E8 N4 E16 N19 $
FGR=[ORIG=-24,46] E24 N23 W24 S23 $
PTO=[ORIG=-44,10] N20 W20 S20 E20 $
FSP=[ORIG=-28,10] W16 W32 S8 E34 U2R2 E5 D2R2 E5 N8 $
FST=[ORIG=0,-30] N23 W10 S23 E10 $
FOP=[ORIG=-63,52] S6 E18 N6 W18 $
FST=[ORIG=0,23] N4 W16 S4 E16 $.

EXTRA FEATURES

LN	OB/XF CODE	DESCRIPTION	BLD	CAP	L	W	UNITS	UT	Adj R	ADJ UNIT PRICE	ORIG COND	YEAR ON	YEAR ACTUAL	Q	% COND	OB/XF MKT VALUE	NOTES
1	0166	CONC,PAVMT	0	100	0	0	2,837.00	UT	1.50	1.50	100	1998	1998	3	100	4,256	
2	0104	GENERATOR	0	100	0	0	1.00	UT	6,000.00	6,000.00	100	2021	2020		70	4,200	

LAND DESCRIPTION

TOTAL OB/XF 8,456

LN	USE CODE	CLS	LAND USE DESCRIPTION	CAP	RD	LOC ZONE	FRONT	DEPTH	TOT LND UTS	UNIT TYPE	DT	DPTH FACT	% COND	TOT ADJ	UNIT PRICE	ADJ UNIT PRICE	LAND VALUE	OTHER ADJUSTMENTS AND NOTES	YEAR	DENSITY	DECL	FRZ	YR	CONSRV
1	0100	C	SFR	100		RSF-1	0.00	0.00	1.00	LT		1.00	1.00	1.00	35,000.00	35,000.00	35,000							

REVIEW DATE 09/06/2024 BY KS Total Acres: 0.73 Total Land Value: 35,000 Market: 0 Agricultural: 0 Common: 35,000 PRINTED 11/19/2025 BY SYS