LOT 4 BLOCK A FOREST COUNTRY 3 R

828-1029,

TILTON JIM H/TILTON VALERIE S
213 SW LOBLOLLY PL
LAKE CITY, FL 32024

2026

15-4S-16-03000-104

COLUMBIA COUNTY PROPERTY

BUILDING CHARACTERISTICS

ELEMENT	CD	CONSTRUCTION
Exterior Wall	10	ABOVE AVG. 100
Roof Structur	08	IRREGULAR 100
Roof Cover	03	COMP SHNGL 100
Interior Wall	05	DRYWALL 100
Interior Floo	14	CARPET 70
Interior Floo	12	HARDWOOD 30
Air Condition	03	CENTRAL 100
Heating Type	04	AIR DUCTED 100
Bedrooms		5 100
Bathrooms		3 100
Frame	02	WOOD FRAME 100
Stories	2.	2. 100
Architectual	05	CONV 100
Units		0 100
Condition Adj	03	03 100
Kitchen Adjus	01	01 100
Quality	07	07
DOR CODE	0100	SINGLE FAMILY
MAP NUM		MKT AREA 06
NEIGHBORHOOD/LOC	15416.030	1.00/

AREA TYPE	TOTAL GROSS AREA	PCT OF BASE	YEAR	TOT ADJ AREA	SUBAREA MARKET VALUE
BAS	2,327	100		2,327	242,437
FGR	518	55		285	29,693
FOP	333	30		100	10,418
FSP	190	40		76	7,918
FST	50	55		28	2,917
FUS	676	100		676	70,429
PTO	396	5		20	2,084
TOTALS	4,490			3,512	365,896

MARKET ADJUSTMENTS

TYPE	MDL	EFF. AREA	TOT ADJ PTS	EFF. BASE RATE	REPL. COST NEW	AYB	EYB	ECON	FNCT		NORM	% COND
0100	01	3,512	125.7033	140.79	494,454	1999	1999	0	0	0	26.00	74.00

1 SINGLE FAM 100% - 2000 Heated Area: 3003 HX Base Yr 2000

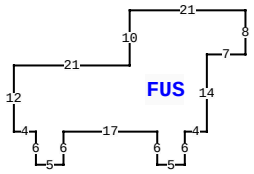

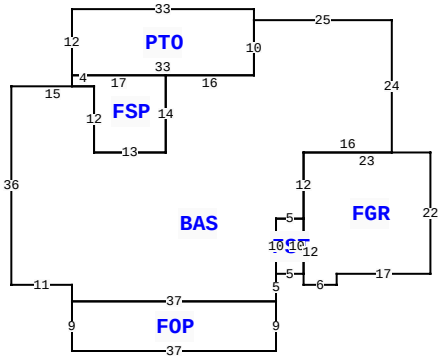

213 SW LOBLOLLY PL, LAKE CITY

BLD DATE		LGL DATE	
XF DATE		LAND DATE	04/03/2025 MLU
INC DATE		AG DATE	

VALUATION SUMMARY

VALUATION BY		STANDARD
Tax Group: 3	Tax Dist:	
BUILDING MARKET VALUE		365,896
TOTAL MARKET OB/XF VALUE		4,157
TOTAL LAND VALUE - MARKET		35,000
TOTAL MARKET VALUE		405,053
SOH/AGL Deduction		136,128
ASSESSED VALUE		268,925
TOTAL EXEMPTION VALUE	HX HB	50,722
BASE TAXABLE VALUE		218,203
TOTAL JUST VALUE		405,053
NCON VALUE		0
INCOME VALUE		
PREVIOUS YEAR MKT VALUE		409,997

PERMIT NUM	DESCRIPTION	AMT	ISSUED
15642	SFR	445	06/11/1999

SALES DATA

OFF RECORD Number	DATE	TYPE INST	Q U	V I	RSN CD	SALE PRICE
0828/1029	8/30/1996	WD	Q	V		18,000

GRANTOR: BLONDINA STEVENS

GRANTEE: JIM & VALERIE TILTO

BUILDING NOTES

BUILDING DIMENSIONS

BAS= W25 PTO= N2 W33 S12 E33 N10$ S10 W16 FSP= W17 S2 E4 S12 E13 N14$ S14 W13N12 W15 S36 E11 S3 FOP= S9 E37 N9 W37$ E37 N5 FST= E5 N10 W5 S10$ N10 E5 FGR= S12E6 N2 E17 N22 W23 S12$ N12 E16N24 $ PTR= N30 FUS= N6 E4N14 E7 N8 W21 S10 W21 S12 E4 S6 E5 N6 E17 S6 E5$ S30$.

EXTRA FEATURES

LN	OB/XF CODE	DESCRIPTION	BLD	CAP	L	W	UNITS	UT	Adj R	ADJ UNIT PRICE	ORIG COND	YEAR ON	YEAR ACTUAL	Q	% COND	OB/XF MKT VALUE	NOTES
1	0190	FPLC PF	0	100	0	0	1.00	UT	1,200.00	1,200.00	100	1999	1999	3	100	1,200	
2	0166	CONC,PAVMT	0	100	0	0	1,971.00	UT	1.50	1.50	100	1999	1999	3	100	2,957	

LAND DESCRIPTION

TOTAL OB/XF 4,157

LN	USE CODE	CLS	LAND USE DESCRIPTION	CAP	RD	LOC ZONE	FRONT	DEPTH	TOT LND UTS	UNIT TYPE	DT	DPTH FACT	% COND	TOT ADJ	UNIT PRICE	ADJ UNIT PRICE	LAND VALUE	OTHER ADJUSTMENTS AND NOTES	YEAR	DENSITY	DECL	FRZ	YR	CONSRV
1	0100	C	SFR	100		RSF-1	0.00	0.00	1.00	LT		1.00	1.00	1.00	35,000.00	35,000.00	35,000							

REVIEW DATE 08/30/2024 BY KS Total Acres: 0.73 Total Land Value: 35,000 Market: 0 Agricultural: 0 Common: 35,000 PRINTED 11/19/2025 BY SYS