LOT 8 BLOCK B FOREST COUNTRY
SECOND ADDITION. PORTION IN
SEC 22-4S-16.

HARDEE JASON/HARDEE BETTY
P O BOX 404
LAKE CITY, FL 32056-0404

2026

15-4S-16-03000-005

COLUMBIA COUNTY PROPERTY

BUILDING CHARACTERISTICS

ELEMENT	CD	CONSTRUCTION
Exterior Wall	19	COMMON BRK 70
Exterior Wall	31	VINYL SID 30
Roof Structur	03	GABLE/HIP 100
Roof Cover	03	COMP SHNGL 100
Interior Wall	05	DRYWALL 100
Interior Floo	14	CARPET 80
Interior Floo	15	HARDTILE 20
Air Condition	03	CENTRAL 100
Heating Type	04	AIR DUCTED 100
Bedrooms		3 100
Bathrooms		2.5 100
Frame	01	NONE 100
Stories	1.	1. 100
Architectual	05	CONV 100
Units		0 100
Condition Adj	03	03 100
Kitchen Adjus	01	01 100
Quality	07	07
DOR CODE	0100	SINGLE FAMILY
MAP NUM		MKT AREA 06
NEIGHBORHOOD/LOC	15416.020	1.00/

AREA TYPE	TOTAL GROSS AREA	PCT OF BASE	YEAR	TOT ADJ AREA	SUBAREA MARKET VALUE
BAS	2,320	100		2,320	204,364
FDG	400	60		240	21,141
FGR	759	55		417	36,733
FOP	36	30		11	969
FSP	573	40		229	20,172
FST	64	55		35	3,083
TOTALS	4,152			3,252	286,462

MARKET ADJUSTMENTS

TYPE	MDL	EFF. AREA	TOT ADJ PTS	EFF. BASE RATE	REPL. COST NEW	AYB	EYB	ECON	FNCT		NORM	% COND
0100	01	3,252	120.9978	135.52	440,711	1989	1989	0	0	0	35.00	65.00

1 SINGLE FAM 100% - 2020 Heated Area: 2320 HX Base Yr 2020

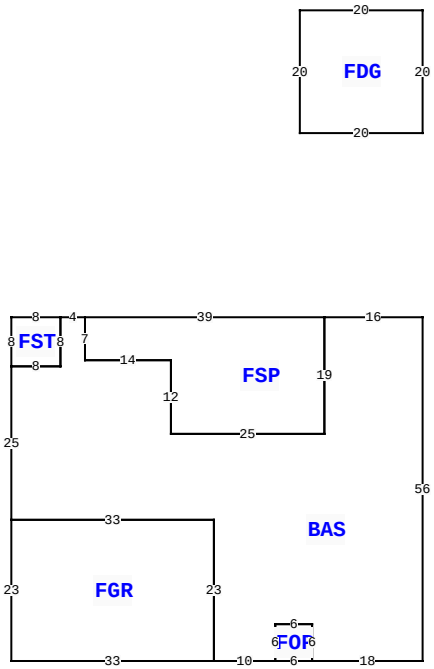

153 SW SHORT LEAF DR, LAKE CITY

BLD DATE		LGL DATE	
XF DATE		LAND DATE	04/03/2025 MLU
INC DATE		AG DATE	

VALUATION SUMMARY

VALUATION BY		STANDARD
Tax Group: 3	Tax Dist:	
BUILDING MARKET VALUE		286,462
TOTAL MARKET OB/XF VALUE		23,486
TOTAL LAND VALUE - MARKET		35,000
TOTAL MARKET VALUE		344,948
SOH/AGL Deduction		103,699
ASSESSED VALUE		241,249
TOTAL EXEMPTION VALUE	HX HB	50,722
BASE TAXABLE VALUE		190,527
TOTAL JUST VALUE		344,948
NCON VALUE		0
INCOME VALUE		
PREVIOUS YEAR MKT VALUE		344,948

PERMIT NUM	DESCRIPTION	AMT	ISSUED
31736	MAINT/ALTR	60	02/10/2014
12801	GARAGE	55	07/21/1997

SALES DATA

OFF RECORD Number	DATE	TYPE INST	Q U	V I	RSN CD	SALE PRICE
1380/0405	3/11/2019	LE	U	I	14	100
GRANTOR: WILLIAM JASON & BETTY						
GRANTEE: KANDACE COTTEY (RMD						
1371/1000	10/19/2018	WD	Q	I	01	219,900
GRANTOR: JOSEPH & SUSAN CROCKE						
GRANTEE: JASON & BETTY HARDE						

BUILDING NOTES

BUILDING DIMENSIONS

BAS= W16 FSP= W39 S7 E14 S12E25 N19$ S19 W25 N12 W14 N7 W4FST= W8 S8 E8 N8$ S8 W8 S25 FGR= S23 E33 N23 W33$ E33 S23E10 FOP= E6 N6 W6 S6 $ N6 E6 S6 E18 N56$ PTR= N30 FDG= N20 W20 S20 E20$ S30$.

EXTRA FEATURES

LN	OB/XF CODE	DESCRIPTION	BLD	CAP	L	W	UNITS	UT	Adj R	ADJ UNIT PRICE	ORIG COND	YEAR ON	YEAR ACTUAL	Q	% COND	OB/XF MKT VALUE	NOTES
1	0280	POOL R/CON	0	100	32	16	512.00	UT	70.00	70.00	100	1989	1989	3	40	14,336	
2	0166	CONC,PAVMT	0	100	0	0	1.00	UT	0.00	0.00	100	0	0	3	100	1,950	
3	0190	FPLC PF	0	100	0	0	1.00	UT	1,200.00	1,200.00	100	0	0	3	100	1,200	
4	0282	POOL ENCL	0	100	0	0	1,000.00	UT	15.00	15.00	100	1989	1989	3	40	6,000	

LAND DESCRIPTION

TOTAL OB/XF 23,486

LN	USE CODE	CLS	LAND USE DESCRIPTION	CAP	RD	LOC ZONE	FRONT	DEPTH	TOT LND UTS	UNIT TYPE	DT	DPTH FACT	% COND	TOT ADJ	UNIT PRICE	ADJ UNIT PRICE	LAND VALUE	OTHER ADJUSTMENTS AND NOTES	YEAR	DENSITY	DECL	FRZ	YR	CONSRV
1	0100	C	SFR	100		RSF-1	0.00	0.00	1.00	LT		1.00	1.00	1.00	35,000.00	35,000.00	35,000							

REVIEW DATE 08/30/2024 BY KS Total Acres: 0.89 Total Land Value: 35,000 Market: 0 Agricultural: 0 Common: 35,000 PRINTED 11/18/2025 BY SYS