BEG NE COR OF SW1/4 OF NW1/4,
RUN S 625.10 FT, S 48 DG E
281.95 FT TO W R/W SR-247, RUN

PARKER BENNIE B
3546 SW STATE ROAD 247
LAKE CITY, FL 32024

2026

15-4S-16-02998-000

COLUMBIA COUNTY PROPERTY

BUILDING CHARACTERISTICS

ELEMENT	CD	CONSTRUCTION
Exterior Wall	19	COMMON BRK 100
Roof Structur	03	GABLE/HIP 100
Roof Cover	03	COMP SHNGL 100
Interior Wall	05	DRYWALL 100
Interior Floo	14	CARPET 80
Interior Floo	12	HARDWOOD 20
Air Condition	03	CENTRAL 100
Heating Type	04	AIR DUCTED 100
Bedrooms		5 100
Bathrooms		5.5 100
Frame	01	NONE 100
Stories	1.	1. 100
Architectual	05	CONV 100
Units		0 100
Condition Adj	03	03 100
Kitchen Adjus	01	01 100
Quality	05	05
DOR CODE	0100	SINGLE FAMILY
MAP NUM		MKT AREA 06
NEIGHBORHOOD/LOC	15416.00	1.00/

AREA TYPE	TOTAL GROSS AREA	PCT OF BASE	YEAR	TOT ADJ AREA	SUBAREA MARKET VALUE
BAS	240	100		240	19,626
BAS	4,269	100		4,269	349,104
FGR	1,688	55		928	75,889
FOP	132	30		40	3,271
FOP	152	30		46	3,762
FOP	300	30		90	7,360
TOTALS	6,781			5,613	459,012

MARKET ADJUSTMENTS

TYPE	MDL	EFF. AREA	TOT ADJ PTS	EFF. BASE RATE	REPL. COST NEW	AYB	EYB	ECON	FNCT		NORM	% COND
0100	01	5,613	112.3260	125.81	706,172	1973	1985	0	0	0	35.00	65.00

1 SINGLE FAM 100% - 2015 Heated Area: 4509 HX Base Yr 2015

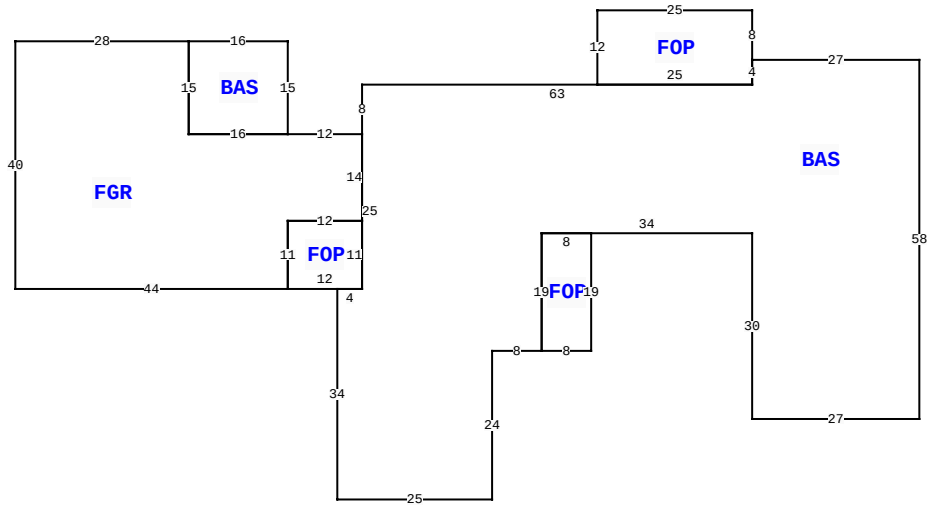

3546 SW STATE ROAD 247 , LAKE CITY

BLD DATE		LGL DATE	
XF DATE		LAND DATE	04/09/2025 MLU
INC DATE		AG DATE	

VALUATION SUMMARY

VALUATION BY		STANDARD
Tax Group: 3	Tax Dist:	
BUILDING MARKET VALUE		459,012
TOTAL MARKET OB/XF VALUE		27,892
TOTAL LAND VALUE - MARKET		95,130
TOTAL MARKET VALUE		582,034
SOH/AGL Deduction		268,220
ASSESSED VALUE		313,814
TOTAL EXEMPTION VALUE	HX HB WX	55,722
BASE TAXABLE VALUE		258,092
TOTAL JUST VALUE		582,034
NCON VALUE		0
INCOME VALUE		
PREVIOUS YEAR MKT VALUE		582,034

PERMIT NUM	DESCRIPTION	AMT	ISSUED
000053134	Remodel	2,254	05/19/2025
000041632	Solar Power Syste	61,000	03/30/2021
31309	GARAGE	420	08/05/2013
30855	MAINT/ALTR	200	03/20/2013

SALES DATA

OFF RECORD Number	DATE	TYPE INST	Q U	V I	RSN CD	SALE PRICE
1297/0951	6/25/2015	WD	U	V	11	5,000
GRANTOR: LAUREL P BENEFIELD (S						
GRANTEE: RICHARD E & BENNIE						
1249/1427	2/08/2013	WD	U	I	16	68,800
GRANTOR: BENNIE BENEFIELD PARK						
GRANTEE: RICHARD E & BENNIE						

BUILDING NOTES

BUILDING DIMENSIONS

BAS= W27 FOP= N8 W25 S12 E25 N4$ S4 W63 S8 FGR= W12 BAS= N15 W16 S15 E16$ W16 N15 W28 S40 E44 FOP= E12 N11 W12 S11$ N11 E12 N14$ S25 W4 S34 E25 N24 E8 FOP= E8 N19 W8 S19$ N19 E34 S30 E27 N58$.

EXTRA FEATURES

LN	OB/XF CODE	DESCRIPTION	BLD	CAP	L	W	UNITS	UT	Adj R	ADJ UNIT PRICE	ORIG COND	YEAR ON	YEAR ACTUAL	Q	% COND	OB/XF MKT VALUE	NOTES
1	0190	FPLC PF	0	100	0	0	2.00	UT	1,200.00	1,200.00	100	0	0	3	100	2,400	
2	0258	PATIO	0	100	0	0	1.00	UT	0.00	0.00	100	0	0	3	100	650	
3	0280	POOL R/CON	0	100	32	16	512.00	UT	52.50	52.50	100	1973	1973	3	40	10,752	
4	0294	SHED WOOD/	0	100	0	0	1.00	UT	0.00	0.00	100	0	0	3	100	850	
5	0120	CLFENCE 4	0	100	0	0	400.00	UT	5.50	5.50	100	2014	2014	3	100	2,200	
6	0166	CONC,PAVMT	0	100	0	0	1,428.00	UT	2.00	2.00	100	2014	2014	3	100	2,856	
7	0166	CONC,PAVMT	0	100	0	0	1.00	UT	0.00	0.00	100	2014	2014	3	100	8,184	

LAND DESCRIPTION

TOTAL OB/XF 27,892

LN	USE CODE	CLS	LAND USE DESCRIPTION	CAP	RD	LOC ZONE	FRONT	DEPTH	TOT LND UTS	UNIT TYPE	DT	DPTH FACT	% COND	TOT ADJ	UNIT PRICE	ADJ UNIT PRICE	LAND VALUE	OTHER ADJUSTMENTS AND NOTES	YEAR	DENSITY	DECL	FRZ	YR	CONSRV
1	0100	C	SFR	100		A-1	0.00	0.00	1.00	AC		1.00	1.00	1.00	4,500.00	4,500.00	4,500							
2	0000	C	VAC RES	100		A-1	0.00	0.00	10.07	AC		1.00	1.00	1.00	9,000.00	9,000.00	90,630							

REVIEW DATE 08/28/2024 BY KS Total Acres: 11.07 Total Land Value: 95,130 Market: 0 Agricultural: 0 Common: 95,130 PRINTED 11/19/2025 BY SYS