COMM NW COR OF SW1/4 OF NE1/4, S
EXT OF S LINE OF LANDS DESC IN O
23.89 FT TO E R/W OF NE MT CARRI

ODOM JUDY DARLENE GREEN/COLE GARY DANE JR
3099 NE MOUNT CARRIE RD
LAKE CITY, FL 32055

2026

15-3S-18-10275-000

COLUMBIA COUNTY PROPERTY

BUILDING CHARACTERISTICS

ELEMENT	CD	CONSTRUCTION
Exterior Wall	19	COMMON BRK 90
Exterior Wall	31	VINYL SID 10
Roof Structur	03	GABLE/HIP 100
Roof Cover	03	COMP SHNGL 100
Interior Wall	05	DRYWALL 100
Interior Floo	14	CARPET 70
Interior Floo	08	SHT VINYL 30
Air Condition	03	CENTRAL 100
Heating Type	04	AIR DUCTED 100
Bedrooms		3 100
Bathrooms		2.5 100
Frame	01	NONE 100
Stories	1.5	1.5 100
Architectual	05	CONV 100
Units		0 100
Condition Adj	03	03 100
Kitchen Adjus	01	01 100
Quality	05	05
DOR CODE	5000	IMPROVED AG
MAP NUM		MKT AREA 05
NEIGHBORHOOD/LOC	1318.00	1.00/

AREA TYPE	TOTAL GROSS AREA	PCT OF BASE	YEAR	TOT ADJ AREA	SUBAREA MARKET VALUE
BAS	1,603	100		1,603	132,758
FOP	666	30		200	16,564
FSP	360	40		144	11,926
FUS	780	100		780	64,599
TOTALS	3,409			2,727	225,846

MARKET ADJUSTMENTS

TYPE	MDL	EFF. AREA	TOT ADJ PTS	EFF. BASE RATE	REPL. COST NEW	AYB	EYB	ECON	FNCT		NORM	% COND
0100	01	2,727	113.5008	127.12	346,656	1991	1991	0	0	0	34.85	65.15

1 SINGLE FAM 100% - 2022 Heated Area: 2383 HX Base Yr 2022

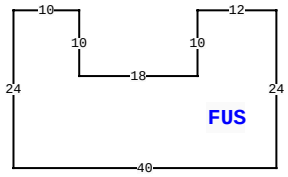

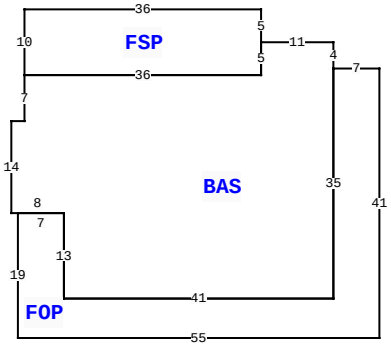

3099 NE MOUNT CARRIE RD, LAKE CITY

BLD DATE		LGL DATE	
XF DATE		LAND DATE	
INC DATE		AG DATE	

VALUATION SUMMARY

VALUATION BY		STANDARD
Tax Group: 3	Tax Dist:	
BUILDING MARKET VALUE		225,846
TOTAL MARKET OB/XF VALUE		4,440
TOTAL LAND VALUE - MARKET		25,584
TOTAL MARKET VALUE		241,397
SOH/AGL Deduction		24,104
ASSESSED VALUE		217,293
TOTAL EXEMPTION VALUE	HX HB	50,722
BASE TAXABLE VALUE		166,571
TOTAL JUST VALUE		255,870
NCON VALUE		0
INCOME VALUE		
PREVIOUS YEAR MKT VALUE		259,406

PERMIT NUM	DESCRIPTION	AMT	ISSUED
000048439	Roof Replacement	32,765	10/18/2023
000043844	Communications To	12,000	10/19/2022

SALES DATA

OFF RECORD Number	DATE	TYPE INST	Q U	V I	RSN CD	SALE PRICE
1493/2400	6/29/2023	WD	U	I	11	100
GRANTOR: ODOM JUDY DARLENE GRE						
GRANTEE: ODOM JUDY DARLENE G						
1457/540	11/18/2021	QC	U	I	11	100
GRANTOR: ODOM JUDY DARLENE GRE						
GRANTEE: COLE GARY DANE JR						

BUILDING NOTES

BUILDING DIMENSIONS

BAS= W11 FSP= N5 W36 S10 E36 N5$ S5 W36 S7 W2 S14 E8 S13 E41 N35 FOP= E7 S41 W55 N19 E7 S13 E41 N35$ N4$ PTR= N30 FUS= W40 N24 E10 S10 E18 N10 E12 S24$ S30$.

EXTRA FEATURES

LN	OB/XF CODE	DESCRIPTION	BLD	CAP	L	W	UNITS	UT	Adj R	ADJ UNIT PRICE	ORIG COND	YEAR ON	YEAR ACTUAL	Q	% COND	OB/XF MKT VALUE	NOTES
1	0190	FPLC PF	0	100	0	0	1.00	UT	1,200.00	1,200.00	100	0	0	3	100	1,200	
2	0040	BARN,POLE	0	100	20	21	1.00	UT	0.00	0.00	100	2005	2005	3	100	500	
3	0166	CONC,PAVMT	0	100	0	0	1.00	UT	0.00	0.00	100	2005	2005	3	100	200	
4	0294	SHED WOOD/	0	100	20	24	1.00	UT	0.00	0.00	100	2005	2005	3	100	500	
5	0252	LEAN-TO W/	0	100	9	20	180.00	UT	3.00	3.00	100	2005	2005	3	100	540	
6	0060	CARPORT F	0	100	0	0	1.00	UT	0.00	0.00	100	2012	2012	3	100	1,200	
7	0294	SHED WOOD/	0	100	0	0	1.00	UT	0.00	0.00	100	2012	2012	3	100	300	

LAND DESCRIPTION

TOTAL OB/XF 4,440

LN	USE CODE	CLS	LAND USE DESCRIPTION	CAP	RD	LOC ZONE	FRONT	DEPTH	TOT LND UTS	UNIT TYPE	DT	DPTH FACT	% COND	TOT ADJ	UNIT PRICE	ADJ UNIT PRICE	LAND VALUE	OTHER ADJUSTMENTS AND NOTES	YEAR	DENSITY	DECL	FRZ	YR	CONSRV
1	0100	C	SFR	100		00	0.00	0.00	3.83	AC		1.00	1.00	1.00	2,400.00	2,400.00	9,192							
2	5600	A	TIMBER 3	0		00	0.00	0.00	6.83	AC		1.00	1.00	1.00	281.00	281.00	1,919							
3	9910	M	MKT.VAL.AG	0			0.00	0.00	6.83	AC		1.00	1.00	1.00	2,400.00	2,400.00	16,392							

REVIEW DATE 02/12/2024 BY JS Total Acres: 10.66 Total Land Value: 11,111 Market: 16,392 Agricultural: 1,919 Common: 9,192 PRINTED 11/20/2025 BY SYS