COMM SW COR OF NW1/4 OF NW1/4, N
2449.44 FT, S 3 DEG E 762.05 FT
1351.15 FT TO W R/W OF MARY RD,

STILLINGS GERALD D SR/BING PAMELA M
432 SW MARY TER
LAKE CITY, FL 32024

2026

14-5S-15-00459-215

COLUMBIA COUNTY PROPERTY

BUILDING CHARACTERISTICS

ELEMENT	CD	CONSTRUCTION
Exterior Wall	08	WD OR PLY 100
Roof Structur	03	GABLE/HIP 100
Roof Cover	03	COMP SHNGL 100
Interior Wall	05	DRYWALL 100
Interior Floo	02	MIN PLYWD 80
Interior Floo	09	PINE WOOD 20
Air Condition	01	NONE 100
Heating Type	02	CONVECTION 100
Bedrooms		2 100
Bathrooms		1.5 100
Frame	01	NONE 100
Stories	1.	1. 100
Architectual	05	CONV 100
Units		0 100
Condition Adj	03	03 100
Kitchen Adjus	01	01 100
Quality	05	05
DOR CODE	5000	IMPROVED AG
MAP NUM		MKT AREA 02
NEIGHBORHOOD/LOC	14515.030	1.00/

AREA TYPE	TOTAL GROSS AREA	PCT OF BASE	YEAR	TOT ADJ AREA	SUBAREA MARKET VALUE
BAS	288	100		288	19,076
FGR	480	55		264	17,486
FUS	528	100		528	34,972
UOP	120	20		24	1,590
UOP	120	20		24	1,590
UOP	120	20		24	1,590
TOTALS	1,656			1,152	76,303

MARKET ADJUSTMENTS

TYPE	MDL	EFF. AREA	TOT ADJ PTS	EFF. BASE RATE	REPL. COST NEW	AYB	EYB	ECON	FNCT		NORM	% COND
0100	01	1,152	90.9840	101.90	117,389	1996	1996	0	0	0	35.00	65.00

1 SINGLE FAM 100% - 1995 Heated Area: 816 HX Base Yr 1995

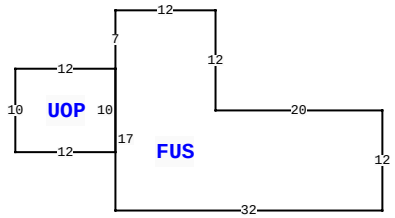

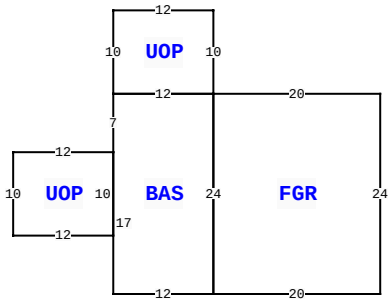

432 SW MARY TER, LAKE CITY

BLD DATE		LGL DATE	
XF DATE		LAND DATE	04/08/2025 MLU
INC DATE		AG DATE	

VALUATION SUMMARY

VALUATION BY		STANDARD
Tax Group: 3	Tax Dist:	
BUILDING MARKET VALUE		76,303
TOTAL MARKET OB/XF VALUE		8,500
TOTAL LAND VALUE - MARKET		217,725
TOTAL MARKET VALUE		100,767
SOH/AGL Deduction		57,587
ASSESSED VALUE		43,180
TOTAL EXEMPTION VALUE	HX HB	25,000
BASE TAXABLE VALUE		18,180
TOTAL JUST VALUE		302,528
NCON VALUE		0
INCOME VALUE		
PREVIOUS YEAR MKT VALUE		302,528

PERMIT NUM	DESCRIPTION	AMT	ISSUED
10834	SFR	65	03/01/1996

SALES DATA

OFF RECORD Number	DATE	TYPE INST	Q U	V I	RSN CD	SALE PRICE
1504/866	11/28/2023	LE	U	I	14	100
GRANTOR: STILLINGS GERALD D SR						
GRANTEE: STILLINGS GERALD D						
1485/102	2/09/2023	LE	U	I	14	0
GRANTOR: STILLINGS GERALD D SR						
GRANTEE: STILLINGS GERALD D						

BUILDING NOTES

BUILDING DIMENSIONS

FUS=[ORIG=0,-30] N12 W20 N12 W12 S7 S17 E32 $
FGR=[ORIG=0,0] S24 E20 N24 W20 $
BAS=[ORIG=0,0] W12 S7 S17 E12 N24 $
UOP=[ORIG=-12,7] W12 S10 E12 N10 $
UOP=[ORIG=0,0] N10 W12 S10 E12 $
UOP=[ORIG=-32,-47] W12 S10 E12 N10 $
.

EXTRA FEATURES

LN	OB/XF CODE	DESCRIPTION	BLD	CAP	L	W	UNITS	UT	Adj R	ADJ UNIT PRICE	ORIG COND	YEAR ON	YEAR ACTUAL	Q	% COND	OB/XF MKT VALUE	NOTES
1	0040	BARN,POLE	0	100	0	0	1.00	UT	0.00	0.00	100	2016	2016	3	100	600	
2	0296	SHED METAL	0	100	0	0	1.00	UT	0.00	0.00	100	2016	2016	3	100	900	
3	9945	Well/Sept	0	100	0	0	1.00	UT	7,000.00	7,000.00	100			3	100	7,000	

LAND DESCRIPTION

TOTAL OB/XF 8,500

LN	USE CODE	CLS	LAND USE DESCRIPTION	CAP	RD	LOC ZONE	FRONT	DEPTH	TOT LND UTS	UNIT TYPE	DT	DPTH FACT	% COND	TOT ADJ	UNIT PRICE	ADJ UNIT PRICE	LAND VALUE	OTHER ADJUSTMENTS AND NOTES	YEAR	DENSITY	DECL	FRZ	YR	CONSRV
1	0200	C	MBL HM	100		A-1	0.00	0.00	1.00	AC		1.00	1.00	1.00	7,500.00	7,500.00	7,500							
2	5500	A	TIMBER 2	0		00	0.00	0.00	19.02	AC		1.00	1.00	1.00	445.00	445.00	8,464							
3	9910	M	MKT.VAL.AG	0		00	0.00	0.00	19.02	AC		1.00	1.00	1.00	7,500.00	7,500.00	142,650							
4	9910	M	MKT.VAL.AG	0		00	0.00	0.00	9.01	AC		1.00	1.00	1.00	7,500.00	7,500.00	67,575							

REVIEW DATE 07/18/2016 BY DF Total Acres: 20.02 Total Land Value: 15,964 Market: 210,225 Agricultural: 8,464 Common: 7,500 PRINTED 11/18/2025 BY SYS