COMM INTERS OF S R/W ANDREW RD & CT, RUN S 279.54 FT FOR POB, RUN 300.96 FT, NW 196.13 FT, N 204.3

SAULS JOHN GERARD/SAULS CYNTHIA ANN
213 SE DOUG MOORE DR
LAKE CITY, FL 32025

2026

14-4S-17-08353-004

COLUMBIA COUNTY PROPERTY

BUILDING CHARACTERISTICS

ELEMENT	CD	CONSTRUCTION
Exterior Wall	19	COMMON BRK 100
Roof Structur	08	IRREGULAR 100
Roof Cover	03	COMP SHNGL 100
Interior Wall	05	DRYWALL 100
Interior Floo	14	CARPET 90
Interior Floo	08	SHT VINYL 10
Air Condition	03	CENTRAL 100
Heating Type	04	AIR DUCTED 100
Bedrooms		3 100
Bathrooms		2 100
Frame	01	NONE 100
Stories	1.	1. 100
Architectual	05	CONV 100
Units		0 100
Condition Adj	03	03 100
Kitchen Adjus	01	01 100
Quality	05	05
DOR CODE	0100	SINGLE FAMILY
MAP NUM		MKT AREA 02
NEIGHBORHOOD/LOC	14417.010	1.00/

AREA TYPE	TOTAL GROSS AREA	PCT OF BASE	YEAR	TOT ADJ AREA	SUBAREA MARKET VALUE
BAS	555	100		555	49,576
BAS	1,374	100		1,374	122,733
FDG	1,232	60		739	66,012
FGR	384	55		211	18,848
FOP	132	30		40	3,573
FSP	180	40		72	6,431
FSP	220	40		88	7,860
UOP	280	20		56	5,002
TOTALS	4,357			3,135	280,034

MARKET ADJUSTMENTS

TYPE	MDL	EFF. AREA	TOT ADJ PTS	EFF. BASE RATE	REPL. COST NEW	AYB	EYB	ECON	FNCT		NORM	% COND
0100	01	3,135	112.3260	125.81	394,414	1996	1996	0	0	0	29.00	71.00

1 SINGLE FAM 100% - 2006 Heated Area: 1929 HX Base Yr 2006

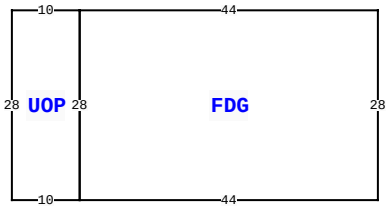

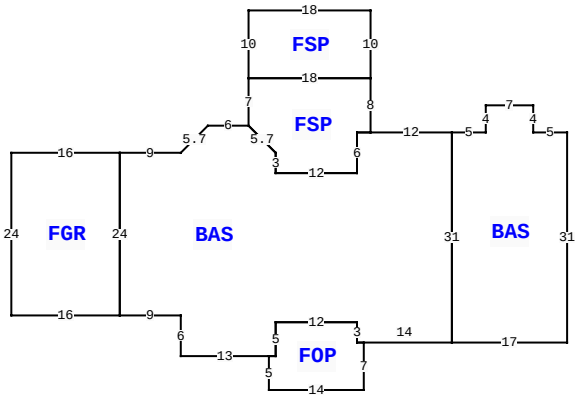

213 SE DOUG MOORE DR, LAKE CITY

BLD DATE		LGL DATE	
XF DATE		LAND DATE	03/15/2022 MLU
INC DATE		AG DATE	

VALUATION SUMMARY

VALUATION BY		STANDARD
Tax Group: 3	Tax Dist:	
BUILDING MARKET VALUE		280,034
TOTAL MARKET OB/XF VALUE		3,192
TOTAL LAND VALUE - MARKET		15,000
TOTAL MARKET VALUE		298,226
SOH/AGL Deduction		99,679
ASSESSED VALUE		198,547
TOTAL EXEMPTION VALUE	HX HB VX	55,722
BASE TAXABLE VALUE		142,825
TOTAL JUST VALUE		298,226
NCON VALUE		0
INCOME VALUE		
PREVIOUS YEAR MKT VALUE		302,170

SALE:4:1: INCLUDED 08346-052

SALE:3:1: INCLUDED 08346-052 - CERTIFICATE OF TITL

PERMIT NUM	DESCRIPTION	AMT	ISSUED
000047280	Roof Replacement	8,400	05/19/2023
000047281	Roof Replacement	20,500	05/19/2023
16643	ADDN SFR	105	02/23/2000
10847	SFR	220	03/05/1996

SALES DATA

OFF RECORD Number	DATE	TYPE INST	Q U	V I	RSN CD	SALE PRICE
1039/0911	3/01/2005	WD	Q	I		167,000
GRANTOR: KENNETH S & SHIRLEY J						
GRANTEE: JOHN GERARD & CYNTH						
0850/1526	12/18/1997	WD	Q	I		73,500
GRANTOR: PROFFITT						
GRANTEE: JOHNSON						

BUILDING NOTES

EXTRA FEATURES

LN	OB/XF CODE	DESCRIPTION	BLD	CAP	L	W	UNITS	UT	Adj R	ADJ UNIT PRICE	ORIG COND	YEAR ON	YEAR ACTUAL	Q	% COND	OB/XF MKT VALUE	NOTES
1	0166	CONC,PAVMT	0	100	0	0	861.00	UT	1.50	1.50	100	1996	1996	3	100	1,292	
2	0169	FENCE/WOOD	0	100	0	0	1.00	UT	0.00	0.00	100	2000	2000	3	100	500	
3	0070	CARPORT UF	0	100	0	0	1.00	UT	0.00	0.00	100	2013	2013	3	100	1,400	

BUILDING DIMENSIONS

BAS= W12 FSP= N8 FSP= N10 W18 S10 E18$ W18 S7 R4 D4 S3 E12 N6 E2$ W2 S6 W12 N3 U4 L4 W6 L4 D4 W9 FGR= W16 S24 E16 N24$ S24 E9 S6 E13FOP= S5 E14 N7 W1 N3 W12 S5 W1$ E1 N5 E12 S3 E14 BAS= E17 N31 W5 N4 W7 S4 W5 S31$ N31$ PTR= N30 FDG= N28 W44 UOP= W10 S28 E10 N28$ S28 E44$ S30$.

LAND DESCRIPTION

TOTAL OB/XF 3,192

LN	USE CODE	CLS	LAND USE DESCRIPTION	CAP	RD	LOC ZONE	FRONT	DEPTH	TOT LND UTS	UNIT TYPE	DT	DPTH FACT	% COND	TOT ADJ	UNIT PRICE	ADJ UNIT PRICE	LAND VALUE	OTHER ADJUSTMENTS AND NOTES	YEAR	DENSITY	DECL	FRZ	YR	CONSRV
1	0100	C	SFR	100		A-1	0.00	0.00	1.00	AC		1.00	1.00	1.00	15,000.00	15,000.00	15,000							

REVIEW DATE 06/20/2023 BY jerry Total Acres: 1.00 Total Land Value: 15,000 Market: 0 Agricultural: 0 Common: 15,000 PRINTED 11/20/2025 BY SYS