COMM SW COR OF NE1/4 OF NE1/4 RU
329.66 FT, E 226.72 FT TO POB. C
FT, N 206.12 FT, WEST 567.11 FT,

LAUBENHEIMER JASON E/LAUBENHEIMER JENNIFER N
10270 SW COUNTY RD 240
LAKE CITY, FL 32024

2026

13-5S-15-00454-002

BUILDING CHARACTERISTICS

ELEMENT	CD	CONSTRUCTION
Exterior Wall	32	HARDIE BRD 100
Roof Structur	08	IRREGULAR 100
Roof Cover	03	COMP SHNGL 100
Interior Wall	05	DRYWALL 100
Interior Floo	12	HARDWOOD 100
Air Condition	03	CENTRAL 100
Heating Type	04	AIR DUCTED 100
Bedrooms		3 100
Bathrooms		2 100
Frame	02	WOOD FRAME 100
Stories	1.	1. 100
Architectual	05	CONV 100
Units		0 100
Quality	07	07

DOR CODE 0100 SINGLE FAMILY

MAP NUM | MKT AREA 02

NEIGHBORHOOD/LOC 13515.00 1.00/

AREA TYPE	TOTAL GROSS AREA	PCT OF BASE	YEAR	TOT ADJ AREA	SUBAREA MARKET VALUE
BAS	1,785	100		1,785	231,795
FCP	576	25		144	18,700
FOP	132	30		40	5,194
FOP	140	30		42	5,454
TOTALS	2,633			2,011	261,143

MARKET ADJUSTMENTS

TYPE	MDL	EFF. AREA	TOT ADJ PTS	EFF. BASE RATE	REPL. COST NEW	AYB	EYB	ECON	FNCT		NORM	% COND
0100	01	2,011	127.4130	142.70	286,970	2016	2016	0	0	0	9.00	91.00

1 SINGLE FAM 100% - 2017 Heated Area: 1785 HX Base Yr 2017

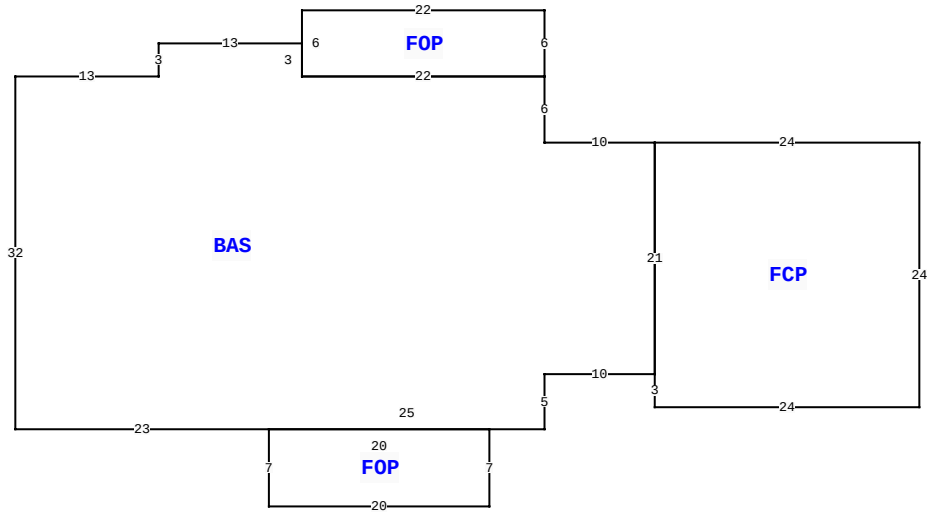

10270 SW COUNTY ROAD 240 , LAKE CITY

BLD DATE		LGL DATE	
XF DATE		LAND DATE	04/07/2025 MLU
INC DATE		AG DATE	

COLUMBIA COUNTY PROPERTY

PAGE 1 of 1 3

VALUATION SUMMARY

VALUATION BY		STANDARD
Tax Group: 3	Tax Dist:	
BUILDING MARKET VALUE		261,143
TOTAL MARKET OB/XF VALUE		4,650
TOTAL LAND VALUE - MARKET		32,040
TOTAL MARKET VALUE		297,833
SOH/AGL Deduction		105,371
ASSESSED VALUE		192,462
TOTAL EXEMPTION VALUE	HX HB	50,722
BASE TAXABLE VALUE		141,740
TOTAL JUST VALUE		297,833
NCON VALUE		0
INCOME VALUE		
PREVIOUS YEAR MKT VALUE		300,702

PERMIT NUM	DESCRIPTION	AMT	ISSUED
34208	SFR	730	07/05/2016

SALES DATA

OFF RECORD Number	DATE	TYPE INST	Q U /	V I /	RSN CD	SALE PRICE
1310/0801	2/25/2016	WD	U	V	11	100

GRANTOR: RONALD & VICKI WITT

GRANTEE: JASON E & JENNIFER

BUILDING NOTES

BUILDING DIMENSIONS

BAS= W10 N6 FOP= N6 W22 S6 E22$ W22 N3 W13 S3 W13 S32 E23
FOP= S7 E20 N7 W20$ E25 N5 E10 FCP= S3 E24 N24 W24 S21$ N21$.

EXTRA FEATURES

LN	OB/XF CODE	DESCRIPTION	BLD	CAP	L	W	UNITS	UT	Adj R	ADJ UNIT PRICE	ORIG COND	YEAR ON	YEAR ACTUAL	Q	% COND	OB/XF MKT VALUE	NOTES
1	0070	CARPORT UF	0	100	0	0	1.00	UT	0.00	0.00	100	2016	2016	3	100	1,500	
2	0060	CARPORT F	0	100	30	30	900.00	UT	3.50	3.50	100	2016	2016	3	100	3,150	

LAND DESCRIPTION

TOTAL OB/XF 4,650

LN	USE CODE	CLS	LAND USE DESCRIPTION	CAP	RD	LOC ZONE	FRONT	DEPTH	TOT LND UTS	UNIT TYPE	DT	DPTH FACT	% COND	TOT ADJ	UNIT PRICE	ADJ UNIT PRICE	LAND VALUE	OTHER ADJUSTMENTS AND NOTES	YEAR	DENSITY	DECL	FRZ	YR	CONSRV
1	0100	C	SFR	100		A-1	0.00	0.00	2.67	AC		1.00	1.00	1.00	12,000.00	12,000.00	32,040							

REVIEW DATE 07/20/2016 BY DF Total Acres: 2.67 Total Land Value: 32,040 Market: 0 Agricultural: 0 Common: 32,040 PRINTED 10/02/2025 BY SYS