COMM NE COR OF N1/2 OF SW1/4 OF
FT FOR POB, CONT W 588.20 FT, S
E 588.76 FT, N 368.58 FT TO POB.

MARTINO EVA/MARTINO JOSEPH
331 SW KICKLIGHTER TER
LAKE CITY, FL 32024

2026

13-4S-16-02953-009

COLUMBIA COUNTY PROPERTY

BUILDING CHARACTERISTICS

ELEMENT	CD	CONSTRUCTION
Exterior Wall	19	COMMON BRK 100
Roof Structur	08	IRREGULAR 100
Roof Cover	14	PREFIN MT 100
Interior Wall	05	DRYWALL 100
Interior Floo	13	LAM/VNLPLK 80
Interior Floo	14	CARPET 20
Air Condition	03	CENTRAL 100
Heating Type	04	AIR DUCTED 100
Bedrooms		4 100
Bathrooms		3 100
Frame	02	WOOD FRAME 100
Stories	1.	1. 100
Units		0 100
Quality	07	07
DOR CODE	5000	IMPROVED AG
MAP NUM		MKT AREA 06
NEIGHBORHOOD/LOC	13416.00	1.00/

AREA TYPE	TOTAL GROSS AREA	PCT OF BASE	YEAR	TOT ADJ AREA	SUBAREA MARKET VALUE
BAS	663	100		663	92,947
BAS	2,048	100		2,048	287,113
FGR	483	55		266	37,291
FOP	16	30		5	701
FOP	301	30		90	12,618
FSP	70	40		28	3,925
FSP	130	40		52	7,290
TOTALS	3,711			3,152	441,884

MARKET ADJUSTMENTS

TYPE	MDL	EFF. AREA	TOT ADJ PTS	EFF. BASE RATE	REPL. COST NEW	AYB	EYB	ECON	FNCT		NORM	% COND
0100	01	3,152	133.1616	149.14	470,089	2019	2019	0	0	0	6.00	94.00

1 SINGLE FAM 100% - 2020 Heated Area: 2711 HX Base Yr 2020

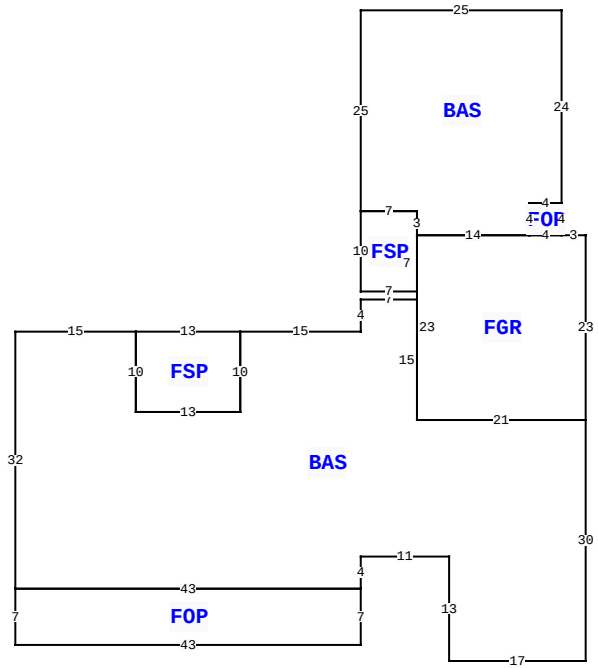

331 SW KICKLIGHTER TER, LAKE CITY

BLD DATE		LGL DATE	
XF DATE		LAND DATE	04/10/2025 MLU
INC DATE		AG DATE	

VALUATION SUMMARY

VALUATION BY		STANDARD
Tax Group: 2	Tax Dist:	
BUILDING MARKET VALUE		441,884
TOTAL MARKET OB/XF VALUE		11,205
TOTAL LAND VALUE - MARKET		35,000
TOTAL MARKET VALUE		461,213
SOH/AGL Deduction		144,875
ASSESSED VALUE		316,338
TOTAL EXEMPTION VALUE	HX HB	50,722
BASE TAXABLE VALUE		265,616
TOTAL JUST VALUE		488,089
NCON VALUE		0
INCOME VALUE		
PREVIOUS YEAR MKT VALUE		492,790

PERMIT NUM	DESCRIPTION	AMT	ISSUED

SALES DATA

OFF RECORD Number	DATE	TYPE INST	Q U	V I	RSN CD	SALE PRICE
1494/774	6/28/2023	QC	U	I	11	100
GRANTOR: BRYANT SHERRIANNE						
GRANTEE: MARTINO JOSEPH						
1441/2458	7/08/2021	LE	U	I	14	100
GRANTOR: MARTINO JOSEPH						
GRANTEE: BRYANT SHERRIANNE						

BUILDING NOTES

BUILDING DIMENSIONS

BAS= W15 FSP= W13 S10 E13 N10$ S10 W13 N10 W15 S32 FOP= S7 E43 N7 W43$ E43 N4 E11 S13 E17 N30 FGR= N23 W3 FOP= N4 W4 S4 E4$ W4 BAS= N4 E4 N24 W25 S25 E7 S3 E14$ W14 FSP= N3 W7 S10 E7 N7$ S23 E21$ W21 N15 W7 S4 $.

EXTRA FEATURES

LN	OB/XF CODE	DESCRIPTION	BLD	CAP	L	W	UNITS	UT	Adj R	ADJ UNIT PRICE	ORIG COND	YEAR ON	YEAR ACTUAL	Q	% COND	OB/XF MKT VALUE	NOTES
1	0294	SHED WOOD/	0	100	42	38	1,596.00	UT	1.75	1.75	100	0	0	3	100	2,793	
2	0166	CONC,PAVMT	0	100	0	0	706.00	UT	2.00	2.00	100	2019	2019	3	100	1,412	
3	9945	Well/Sept	0	100	0	0	1.00	UT	7,000.00	7,000.00	100			3	100	7,000	

LAND DESCRIPTION

TOTAL OB/XF 11,205

LN	USE CODE	CLS	LAND USE DESCRIPTION	CAP	RD	LOC ZONE	FRONT	DEPTH	TOT LND UTS	UNIT TYPE	DT	DPTH FACT	% COND	TOT ADJ	UNIT PRICE	ADJ UNIT PRICE	LAND VALUE	OTHER ADJUSTMENTS AND NOTES	YEAR	DENSITY	DECL	FRZ	YR	CONSRV
1	0100	C	SFR	100		00	0.00	0.00	1.00	AC		1.00	1.00	1.00	7,000.00	7,000.00	7,000							
2	5600	A	TIMBER 3	0			0.00	0.00	4.00	AC		1.00	1.00	1.00	281.00	281.00	1,124							
3	9910	M	MKT.VAL.AG	0		00	0.00	0.00	4.00	AC		1.00	1.00	1.00	7,000.00	7,000.00	28,000							

REVIEW DATE 01/22/2025 BY KS Total Acres: 5.00 Total Land Value: 8,124 Market: 28,000 Agricultural: 1,124 Common: 7,000 PRINTED 11/07/2025 BY SYS