LOT 16 AMELIA LANDING PHASE 1.

WD 1264-2251

CROCKER JOSEPH P/CROCKER SUSAN W
319 SW BEACON WAY
LAKE CITY, FL 32025

2026

13-4S-16-02951-116

COLUMBIA COUNTY PROPERTY

BUILDING CHARACTERISTICS

ELEMENT	CD	CONSTRUCTION
Exterior Wall	32	HARDIE BRD 100
Roof Structur	08	IRREGULAR 100
Roof Cover	14	PREFIN MT 100
Interior Wall	05	DRYWALL 100
Interior Floo	12	HARDWOOD 100
Air Condition	03	CENTRAL 100
Heating Type	04	AIR DUCTED 100
Bedrooms		2 100
Bathrooms		2 100
Frame	02	WOOD FRAME 100
Stories	1.	1. 100
Units		0 100
Quality	06	06

DOR CODE 0100 SINGLE FAMILY

MAP NUM | MKT AREA 06

NEIGHBORHOOD/LOC 13416.040 1.00/

AREA TYPE	TOTAL GROSS AREA	PCT OF BASE	YEAR	TOT ADJ AREA	SUBAREA MARKET VALUE
APT	408	100		408	54,368
BAS	1,338	100		1,338	178,295
FOP	224	30		67	8,928
FOP	396	30		119	15,857
FUS	408	100		408	54,368
HGR	2,092	45		941	125,392
TOTALS	4,866			3,281	437,208

MARKET ADJUSTMENTS

TYPE	MDL	EFF. AREA	TOT ADJ PTS	EFF. BASE RATE	REPL. COST NEW	AYB	EYB	ECON	FNCT		NORM	% COND
0100	01	3,281	126.5670	141.76	465,115	2019	2019	0	0	0	6.00	94.00

1 SINGLE FAM 100% - 2020 Heated Area: 2154 HX Base Yr 2020

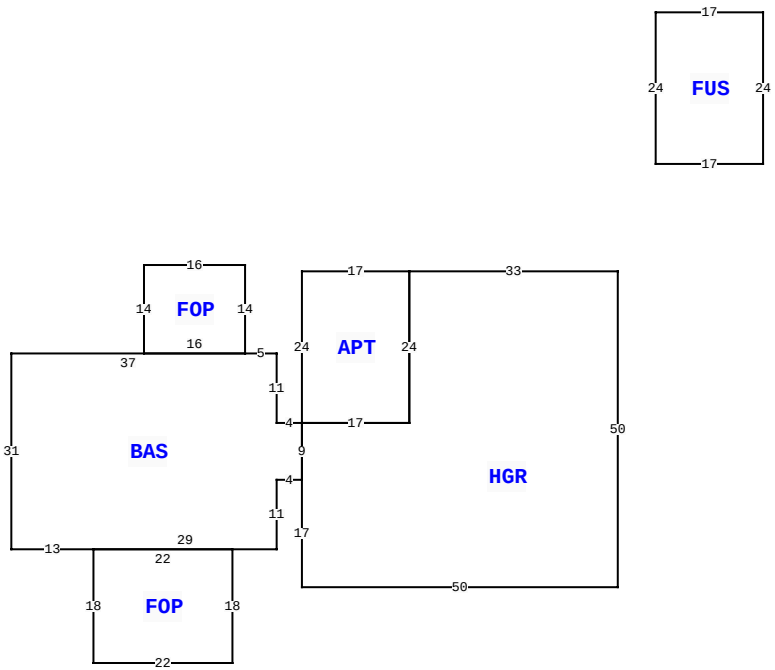

319 SW BEACON WAY, LAKE CITY

BLD DATE		LGL DATE	
XF DATE		LAND DATE	04/03/2025 MLU
INC DATE		AG DATE	

VALUATION SUMMARY

VALUATION BY		STANDARD
Tax Group: 2	Tax Dist:	
BUILDING MARKET VALUE		437,208
TOTAL MARKET OB/XF VALUE		6,410
TOTAL LAND VALUE - MARKET		35,000
TOTAL MARKET VALUE		478,618
SOH/AGL Deduction		128,883
ASSESSED VALUE		349,735
TOTAL EXEMPTION VALUE	HX HB	50,722
BASE TAXABLE VALUE		299,013
TOTAL JUST VALUE		478,618
NCON VALUE		0
INCOME VALUE		
PREVIOUS YEAR MKT VALUE		483,269

PERMIT NUM	DESCRIPTION	AMT	ISSUED
37651	SFR	700	01/22/2019
34766	PLANE HNGR	725	12/20/2016
33618	SFR	1,244	12/09/2015

SALES DATA

OFF RECORD Number	DATE	TYPE INST	Q U /	V I /	RSN CD	SALE PRICE
1264/2251	11/12/2013	WD	Q	V	01	16,000

GRANTOR: AMELIA LANDING INC

GRANTEE: JOSEPH & SUSAN CROC

BUILDING NOTES

BUILDING DIMENSIONS

BAS= W5 FOP= N14 W16 S14 E16$ W37 S31 E13 FOP= S18 E22 N18 W22$ E29 N11 E4 HGR= S17 E50 N50 W33 APT= W17 S24 E17 N24$ S24 W17 S9$ N9 W4 N11$ PTR= E60 N30 FUS= E17 N24 W17 S24$ W60 S30$.

EXTRA FEATURES

LN	OB/XF CODE	DESCRIPTION	BLD	CAP	L	W	UNITS	UT	Adj R	ADJ UNIT PRICE	ORIG COND	YEAR ON	YEAR ACTUAL	Q	% COND	OB/XF MKT VALUE	NOTES
1	0166	CONC,PAVMT	0	100	0	0	3,205.00	UT	2.00	2.00	100	2017	2017	3	100	6,410	

LAND DESCRIPTION

TOTAL OB/XF 6,410

LN	USE CODE	CLS	LAND USE DESCRIPTION	CAP	RD	LOC ZONE	FRONT	DEPTH	TOT LND UTS	UNIT TYPE	DT	DPTH FACT	% COND	TOT ADJ	UNIT PRICE	ADJ UNIT PRICE	LAND VALUE	OTHER ADJUSTMENTS AND NOTES	YEAR	DENSITY	DECL	FRZ	YR	CONSRV
1	0100	C	SFR	100		RSF-1	0.00	0.00	1.00	LT		1.00	1.00	1.00	35,000.00	35,000.00	35,000							

REVIEW DATE 01/08/2025 BY KS Total Acres: 0.51 Total Land Value: 35,000 Market: 0 Agricultural: 0 Common: 35,000 PRINTED 11/18/2025 BY SYS