SE1/4 OF NE1/4 OF NW1/4 & THE SE
& THE E 60 FT OF THE S 60 FT OF
NE1/4 OF NW1/4 & EX 5.02 AC DESC

KLOPP CHRISTOPHER JAMES
1250 SW JAFUS AVE
LAKE CITY, FL 32024

2026

13-4S-15-00358-002

COLUMBIA COUNTY PROPERTY

BUILDING CHARACTERISTICS

ELEMENT	CD	CONSTRUCTION
Exterior Wall	19	COMMON BRK 100
Roof Structur	04	WOOD TRUSS 100
Roof Cover	03	COMP SHNGL 100
Interior Wall	05	DRYWALL 100
Interior Floo	14	CARPET 90
Interior Floo	08	SHT VINYL 10
Air Condition	03	CENTRAL 100
Heating Type	04	AIR DUCTED 100
Bedrooms		3 100
Bathrooms		3 100
Frame	01	NONE 100
Stories	1.	1. 100
Architectual	05	CONV 100
Units		0 100
Condition Adj	03	03 100
Kitchen Adjus	01	01 100
Quality	06	06

DOR CODE 5000 IMPROVED AG

MAP NUM | MKT AREA 01

NEIGHBORHOOD/LOC 13415.00 1.00/

AREA TYPE	TOTAL GROSS AREA	PCT OF BASE	YEAR	TOT ADJ AREA	SUBAREA MARKET VALUE
BAS	3,310	100		3,310	276,834
FGR	575	55		316	26,429
FSP	132	40		53	4,433
FSP	312	40		125	10,455
PTO	296	5		15	1,255
TOTALS	4,625			3,819	319,404

MARKET ADJUSTMENTS

TYPE	MDL	EFF. AREA	TOT ADJ PTS	EFF. BASE RATE	REPL. COST NEW	AYB	EYB	ECON	FNCT		NORM	% COND
0100	01	3,819	114.8868	128.67	491,391	1989	1989	0	0	0	35.00	65.00

1 SINGLE FAM 0% - 2025 Heated Area: 3310 HX Base Yr

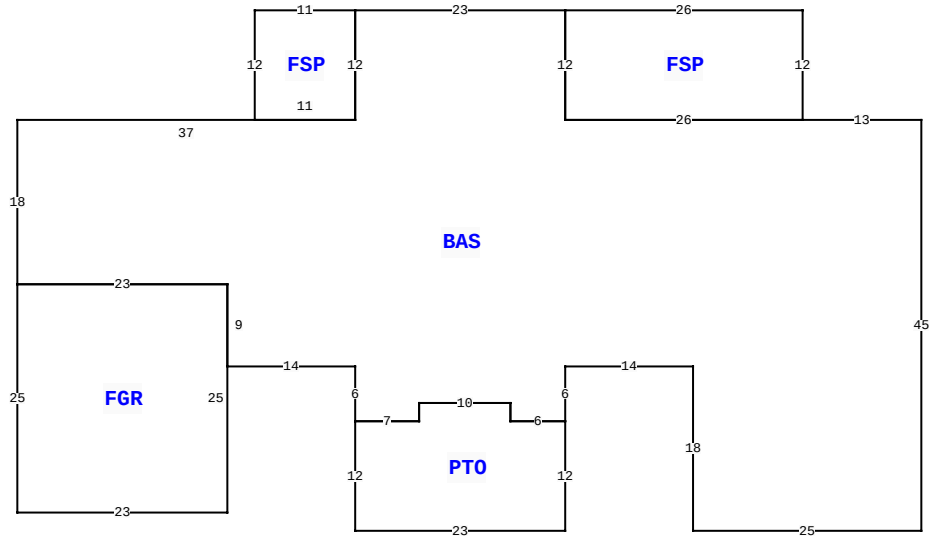

1250 SW JAFUS AVE, LAKE CITY

BLD DATE		LGL DATE	
XF DATE		LAND DATE	04/07/2025 MLU
INC DATE		AG DATE	

VALUATION SUMMARY

VALUATION BY	STANDARD
Tax Group: 3	Tax Dist:
BUILDING MARKET VALUE	319,404
TOTAL MARKET OB/XF VALUE	38,109
TOTAL LAND VALUE - MARKET	90,450
TOTAL MARKET VALUE	403,905
SOH/AGL Deduction	0
ASSESSED VALUE	403,905
TOTAL EXEMPTION VALUE	0
BASE TAXABLE VALUE	403,905
TOTAL JUST VALUE	447,963
NCON VALUE	0
INCOME VALUE	
PREVIOUS YEAR MKT VALUE	447,963

PERMIT NUM	DESCRIPTION	AMT	ISSUED
30446	MAINT/ALTR	45	09/10/2012
18163	POOL	100	04/13/2001

SALES DATA

OFF RECORD Number	DATE	TYPE INST	Q U /	V I /	RSN CD	SALE PRICE
1283/1960	10/27/2014	PB	U	I	18	0
GRANTOR: CLERK OF COURT (KLOPP						
GRANTEE: KLOPP CHRISTOPHER J						
1273/1512	4/28/2014	PB	U	I	18	100
GRANTOR: CLERK OF COURT (ROBER						
GRANTEE: LINDA KLOPP AS PR						

BUILDING NOTES

BUILDING DIMENSIONS

BAS= W13 FSP= N12 W26 S12 E26$ W26 N12 W23 FSP= W11 S12E11 N12$ S12 W37 S18 FGR= S25 E23 N25 W23$ E23 S9 E14 S6PTO= S12 E23 N12 W6 N2 W10 S2W7$ E7 N2 E10 S2 E6 N6 E14 S18E25 N45$.

EXTRA FEATURES

LN	OB/XF CODE	DESCRIPTION	BLD	CAP	L	W	UNITS	UT	Adj R	ADJ UNIT PRICE	ORIG COND	YEAR ON	YEAR ACTUAL	Q	% COND	OB/XF MKT VALUE	NOTES
1	0180	FPLC 1STRY	0	0	0	0	1.00	UT	2,000.00	2,000.00	100	0	0	3	100	2,000	
2	0166	CONC,PAVMT	0	0	0	0	424.00	UT	1.50	1.50	100	1993	1993	3	100	636	
3	0294	SHED WOOD/	0	0	18	30	1.00	UT	0.00	0.00	100	1993	1993	3	100	5,000	
4	0280	POOL R/CON	0	0	0	0	548.00	UT	70.00	70.00	100	2001	2001	3	40	15,344	
5	0282	POOL ENCL	0	0	26	54	1,404.00	UT	15.00	15.00	100	2001	2001	3	40	8,424	
6	0166	CONC,PAVMT	0	0	3	90	270.00	UT	1.50	1.50	100	2001	2001	3	100	405	
7	0020	BARN,FR	0	0	0	0	1.00	UT	0.00	0.00	100	2005	2005	3	100	1,500	
8	0020	BARN,FR	0	0	0	0	1.00	UT	0.00	0.00	100	2005	2005	3	100	300	
9	0020	BARN,FR	0	0	0	0	1.00	UT	0.00	0.00	100	2005	2005	3	100	1,500	
10	0020	BARN,FR	0	0	0	0	1.00	UT	0.00	0.00	100	2005	2005	3	100	3,000	

TOTAL OB/XF 38,109

LAND DESCRIPTION

LN	USE CODE	CLS	LAND USE DESCRIPTION	CAP	RD	LOC ZONE	FRONT	DEPTH	TOT LND UTS	UNIT TYPE	DT	DPTH FACT	% COND	TOT ADJ	UNIT PRICE	ADJ UNIT PRICE	LAND VALUE	OTHER ADJUSTMENTS AND NOTES	YEAR	DENSITY	DECL	FRZ	YR	CONSRV
1	0100	C	SFR	0		A-1	0.00	0.00	4.90	AC		1.00	1.00	1.00	9,000.00	9,000.00	44,100							
2	5500	A	TIMBER 2	0		A-1	0.00	0.00	5.15	AC		1.00	1.00	1.00	445.00	445.00	2,292							
3	9910	M	MKT.VAL.AG	0		A-1	0.00	0.00	5.15	AC		1.00	1.00	1.00	9,000.00	9,000.00	46,350							

REVIEW DATE 12/03/2024 BY KS Total Acres: 10.05 Total Land Value: 46,392 Market: 46,350 Agricultural: 2,292 Common: 44,100 PRINTED 11/18/2025 BY SYS