COMM NE COR SEC, RUN S 1848.68 F
R/W LINE CR-25A FOR POB, RUN SE
1057.92 FT TO S LINE OF NW1/4 OF

HILL & SMITH INC
987 BUCKEYE PARK RD
COLUMBUS, OH 43207

2026

13-3S-16-02097-000

COLUMBIA COUNTY PROPERTY

BUILDING CHARACTERISTICS

ELEMENT	CD	CONSTRUCTION
Exterior Wall	24	CORG METAL 100
Roof Structur	10	STEEL FRME 100
Roof Cover	12	MODULAR MT 100
Interior Wall	07	NONE 100
Interior Floo	03	CONC FINSH 100
Air Condition	01	NONE 100
Heating Type	01	NONE 100
Plumbing		10 100
Frame	03	MASONRY 100
Story Height		20 100
RMS		0 100
Stories	1.	1. 100
Units		0 100
Condition Adj	03	03 100
Quality	05	05

DOR CODE	4100	LIGHT MANUFACTURE	
MAP NUM		MKT AREA	03
NEIGHBORHOOD/LOC	13316.00	1.00/	

AREA TYPE	TOTAL GROSS AREA	PCT OF BASE	YEAR	TOT ADJ AREA	SUBAREA MARKET VALUE
AOF	856	150		1,284	21,128
BAS	744	100		744	12,243
BAS	2,940	100		2,940	48,378
BAS	8,400	100		8,400	138,222
BAS	14,460	100		14,460	237,940
UST	1,232	50		616	10,137
TOTALS	28,632			28,444	468,046

MARKET ADJUSTMENTS

TYPE	MDL	EFF. AREA	TOT ADJ PTS	EFF. BASE RATE	REPL. COST NEW	AYB	EYB	ECON	FNCT		NORM	% COND
8000	06	28,444	78.3655	32.91	936,092	1974	1974	0	0	0	50.00	50.00

1 MANUF LGHT 0% - 0 Heated Area: 27400 HX Base Yr

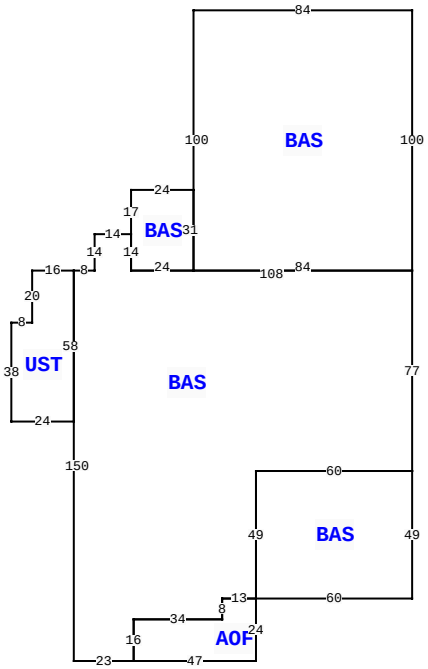

2118 NW COUNTY ROAD 25A , LAKE CITY

BLD DATE		LGL DATE	
XF DATE		LAND DATE	04/09/2025 MLU
INC DATE		AG DATE	

VALUATION SUMMARY

VALUATION BY	STANDARD
Tax Group: 3	Tax Dist:
BUILDING MARKET VALUE	468,046
TOTAL MARKET OB/XF VALUE	31,870
TOTAL LAND VALUE - MARKET	142,455
TOTAL MARKET VALUE	642,371
SOH/AGL Deduction	0
ASSESSED VALUE	642,371
TOTAL EXEMPTION VALUE	0
BASE TAXABLE VALUE	642,371
TOTAL JUST VALUE	642,371
NCON VALUE	0
INCOME VALUE	
PREVIOUS YEAR MKT VALUE	642,371

PERMIT NUM	DESCRIPTION	AMT	ISSUED
000054069	Roof Replacement	10,725	09/16/2025
000050195	Electrical Servic	25,000	06/24/2024
000046223	Roof Replacement	61,123	01/10/2023
13459	M H	125	12/30/1997
10990	PUMP/UTPOL	30	04/05/1996

SALES DATA

OFF RECORD Number	DATE	TYPE INST	Q U /	V I /	RSN CD	SALE PRICE
1359/1352	5/02/2018	WD	U	I	30	1,050,000
GRANTOR: WORK AREA PROTECTION						
GRANTEE: HILL & SMITH INC						
1318/1107	6/29/2016	WD	U	I	30	1,050,000
GRANTOR: PROTECTION SERVICES I						
GRANTEE: WORK AREA PROTECTIO						

BUILDING NOTES

BUILDING DIMENSIONS

BAS= W108 N14 BAS= N17 E24 S31 W24 N14$ W14 S14 W8 UST= W16 S20 W8 S38 E24 N58 $ S150 E23 AOF= E47 N24 W13 S8 W34 S16$ N16 E34 N8 E13 BAS= E60 N49 W60 S49$ N49 E60 N77$ BAS= N100 W84 S100 E84$.

EXTRA FEATURES

LN	OB/XF CODE	DESCRIPTION	BLD	CAP	L	W	UNITS	UT	Adj R	ADJ UNIT PRICE	ORIG COND	YEAR ON	YEAR ACTUAL	Q	% COND	OB/XF MKT VALUE	NOTES
1	0260	PAVEMENT-A	0	0	0	0	1.00	UT	0.00	0.00	100	0	0	3	100	11,310	
2	0030	BARN,MT	0	0	28	30	840.00	UT	11.00	11.00	100	2018	2018	3	100	9,240	
3	0166	CONC,PAVMT	0	0	0	0	1.00	UT	0.00	0.00	100	0	0	3	100	4,000	
4	9947	Septic	0	0	0	0	1.00	UT	3,000.00	3,000.00	100			3	100	3,000	
5	0251	LEAN TO W/	0	0	12	30	360.00	UT	3.50	3.50	100	2018	2018	3	100	1,260	
6	0070	CARPORT UF	0	0	0	0	1.00	UT	0.00	0.00	100	2018	2018	3	100	300	
7	0166	CONC,PAVMT	0	0	0	0	1.00	UT	0.00	0.00	100	2018	2018	3	100	1,500	
8	0251	LEAN TO W/	0	0	12	30	360.00	UT	3.50	3.50	100	2018	2018	3	100	1,260	

LAND DESCRIPTION

TOTAL OB/XF 31,870

LN	USE CODE	CLS	LAND USE DESCRIPTION	CAP	RD	LOC ZONE	FRONT	DEPTH	TOT LND UTS	UNIT TYPE	DT	DPTH FACT	% COND	TOT ADJ	UNIT PRICE	ADJ UNIT PRICE	LAND VALUE	OTHER ADJUSTMENTS AND NOTES	YEAR	DENSITY	DECL	FRZ	YR	CONSRV
1	4100	C	LIGHT MFG	0		I	0.00	0.00	10.00	AC		1.00	1.00	1.00	9,000.00	9,000.00	90,000							
2	4100	C	LIGHT MFG	0		I	0.00	0.00	4.30	AC		1.00	1.00	1.00	50.00	50.00	215							
3	0000	C	VAC RES	0		I	0.00	0.00	6.53	AC		1.00	1.00	1.00	8,000.00	8,000.00	52,240							

REVIEW DATE 05/10/2023 BY JB Total Acres: 20.83 Total Land Value: 142,455 Market: 0 Agricultural: 0 Common: 142,455 PRINTED 11/04/2025 BY SYS