BEG NE COR OF NE1/4 OF SE1/4,
RUN W 529.66 FT, CONT NW
111.17 FT, CONT NW 703.08 FT,

MOSES MICHAEL C/MOSES CATHY S
439 SW MAIN BLVD
LAKE CITY, FL 32025

2026

13-3S-15-00176-005

COLUMBIA COUNTY PROPERTY

BUILDING CHARACTERISTICS

ELEMENT	CD	CONSTRUCTION
Exterior Wall	10	ABOVE AVG. 100
Roof Structur	03	GABLE/HIP 100
Roof Cover	14	PREFIN MT 100
Interior Wall	05	DRYWALL 100
Interior Floo	15	HARDTILE 100
Air Condition	03	CENTRAL 100
Heating Type	04	AIR DUCTED 100
Bedrooms		3 100
Bathrooms		2 100
Frame	02	WOOD FRAME 100
Stories	1.	1. 100
Architectual	05	CONV 100
Units		0 100
Quality	06	06
DOR CODE	5000	IMPROVED AG
MAP NUM		MKT AREA 01
NEIGHBORHOOD/LOC	13315.00	1.00/

AREA TYPE	TOTAL GROSS AREA	PCT OF BASE	YEAR	TOT ADJ AREA	SUBAREA MARKET VALUE
BAS	2,697	100		2,697	334,285
FGR	1,080	55		594	73,624
FOP	150	30		45	5,578
FOP	200	30		60	7,437
FOP	234	30		70	8,676
FOP	448	30		134	16,609
FOP	595	30		178	22,063
FST	432	55		238	29,499
TOTALS	5,836			4,016	497,771

MARKET ADJUSTMENTS

TYPE	MDL	EFF. AREA	TOT ADJ PTS	EFF. BASE RATE	REPL. COST NEW	AYB	EYB	ECON	FNCT		NORM	% COND
0100	01	4,016	130.2000	145.82	585,613	2010	2010	0	0	0	15.00	85.00

1 SINGLE FAM 100% - 2011 Heated Area: 2697 HX Base Yr 2011

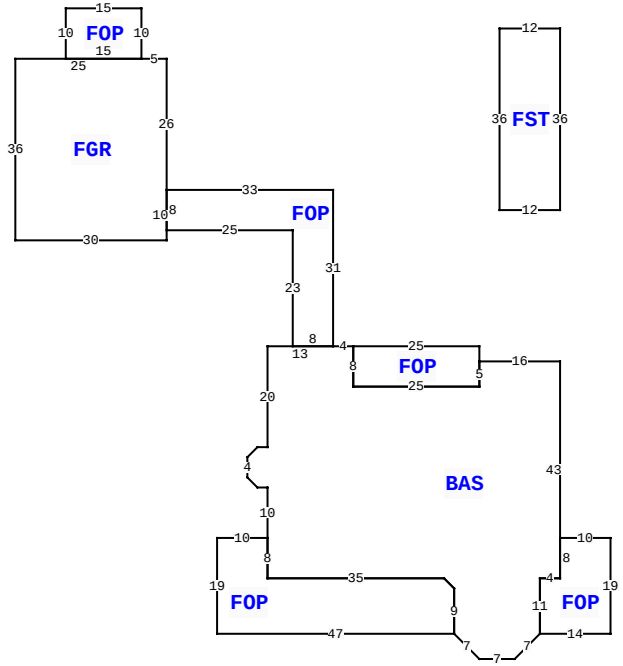

413 NW RIDGE GLN, WELLBORN

BLD DATE		LGL DATE	
XF DATE		LAND DATE	04/08/2025 MLU
INC DATE		AG DATE	

VALUATION SUMMARY

VALUATION BY		STANDARD
Tax Group: 3	Tax Dist:	
BUILDING MARKET VALUE		497,771
TOTAL MARKET OB/XF VALUE		52,130
TOTAL LAND VALUE - MARKET		133,000
TOTAL MARKET VALUE		561,941
SOH/AGL Deduction		142,483
ASSESSED VALUE		419,458
TOTAL EXEMPTION VALUE	HX HB	50,722
BASE TAXABLE VALUE		368,736
TOTAL JUST VALUE		682,901
NCON VALUE		0
INCOME VALUE		
PREVIOUS YEAR MKT VALUE		688,757

PERMIT NUM	DESCRIPTION	AMT	ISSUED
28320	SFR	1,515	01/13/2010

SALES DATA

OFF RECORD Number	DATE	TYPE INST	Q U	V I	RSN CD	SALE PRICE
1185/2249	12/11/2009	WD	Q	V	01	82,900

GRANTOR: JOHN & LAURA MCCALL

GRANTEE: MICHAEL & CATHY MOS

BUILDING NOTES

EXTRA FEATURES

LN	OB/XF CODE	DESCRIPTION	BLD	CAP	L	W	UNITS	UT	Adj R	ADJ UNIT PRICE	ORIG COND	YEAR ON	YEAR ACTUAL	Q	% COND	OB/XF MKT VALUE	NOTES
1	0166	CONC,PAVMT	0	100	0	0	4,030.00	UT	2.25	2.25	100	2010	2010	3	100	9,068	
2	0260	PAVEMENT-A	0	100	10	1315	13,150.00	UT	1.30	1.30	80	2010	2010	3	80	13,676	
3	0327	STABLES-SM	0	100	24	72	1,728.00	UT	7.00	7.00	100	2010	2010	3	100	12,096	
4	0060	CARPORT F	0	100	21	40	840.00	UT	3.50	3.50	100	2010	2010	3	100	2,940	
5	0180	FPLC 1STRY	0	100	0	0	2.00	UT	2,000.00	2,000.00	100	2010	2010	3	100	4,000	
6	0030	BARN,MT	0	0	18	25	450.00	UT	11.00	11.00	100	2016	2016	3	100	4,950	
7	0169	FENCE/WOOD	0	100	0	0	1.00	UT	0.00	0.00	100	2016	2016	3	100	5,400	

BUILDING DIMENSIONS

BAS=[ORIG=0,0] W16 S5 W25 N8 W4 W13 S20 W2 D2L2 S4 D2R2 E2
S10 S8 E35 D2R2 S9 D5R5 E7 U5R5 N11 E4 N43 $
FGR=[ORIG=-78,-34] N26 W5 W25 S36 E30 N10 $
FOP=[ORIG=-58,35] W10 S19 E47 N9 U2L2 W35 N8 $
FOP=[ORIG=-45,-3] N31 W33 S8 E25 S23 E8 $
FST=[ORIG=0,-30] N36 W12 S36 E12 $
FOP=[ORIG=-4,54] E14 N19 W10 S8 W4 S11 $
FOP=[ORIG=-16,0] N3 W25 S8 E25 N5 $
FOP=[ORIG=-83,-60] N10 W15 S10 E15 $
.

LAND DESCRIPTION

TOTAL OB/XF 52,130

LN	USE CODE	CLS	LAND USE DESCRIPTION	CAP	RD	LOC ZONE	FRONT	DEPTH	TOT LND UTS	UNIT TYPE	DT	DPTH FACT	% COND	TOT ADJ	UNIT PRICE	ADJ UNIT PRICE	LAND VALUE	OTHER ADJUSTMENTS AND NOTES	YEAR	DENSITY	DECL	FRZ	YR	CONSRV
1	0100	C	SFR	100			0.00	0.00	1.00	AC		1.00	1.00	1.00	7,000.00	7,000.00	7,000							
2	6200	A	PASTURE 3	0		A-1	0.00	0.00	18.00	AC		1.00	1.00	1.00	280.00	280.00	5,040							
3	9910	M	MKT.VAL.AG	0		A-1	0.00	0.00	18.00	AC		1.00	1.00	1.00	7,000.00	7,000.00	126,000							

REVIEW DATE 01/27/2023 BY KS Total Acres: 19.00 Total Land Value: 12,040 Market: 126,000 Agricultural: 5,040 Common: 7,000 PRINTED 11/21/2025 BY SYS