LOT 5 GOLDEN FARMETTES S/D.
ORB 719-510, 821-741,

SHELTON MARK A/SHELTON SUSAN D
305 SW TRUDY WAY
FORT WHITE, FL 32038

2026

12-7S-16-04190-005

COLUMBIA COUNTY PROPERTY

BUILDING CHARACTERISTICS

ELEMENT	CD	CONSTRUCTION
Exterior Wall	05	AVERAGE 50
Exterior Wall	15	CONC BLOCK 50
Roof Structur	08	IRREGULAR 100
Roof Cover	03	COMP SHNGL 100
Interior Wall	05	DRYWALL 100
Interior Floo	14	CARPET 100
Air Condition	03	CENTRAL 100
Heating Type	04	AIR DUCTED 100
Bedrooms		3 100
Bathrooms		2.5 100
Frame	01	NONE 100
Stories	2.	2. 100
Architectual	05	CONV 100
Units		0 100
Condition Adj	03	03 100
Kitchen Adjus	01	01 100
Quality	05	05
DOR CODE	0100	SINGLE FAMILY
MAP NUM		MKT AREA 02
NEIGHBORHOOD/LOC	12716.030	1.00/

AREA TYPE	TOTAL GROSS AREA	PCT OF BASE	YEAR	TOT ADJ AREA	SUBAREA MARKET VALUE
BAS	1,224	100		1,224	102,816
FOP	96	30		29	2,436
FOP	96	30		29	2,436
FST	192	55		106	8,904
FUS	696	100		696	58,464
PTO	428	5		21	1,764
UOP	64	20		13	1,092
UST	368	45		166	13,944
TOTALS	3,164			2,284	191,855

MARKET ADJUSTMENTS

TYPE	MDL	EFF. AREA	TOT ADJ PTS	EFF. BASE RATE	REPL. COST NEW	AYB	EYB	ECON	FNCT		NORM	% COND
0100	01	2,284	115.3845	129.23	295,161	1989	1989	0	0	0	35.00	65.00

1 SINGLE FAM 100% - 2007 Heated Area: 1920 HX Base Yr 2007

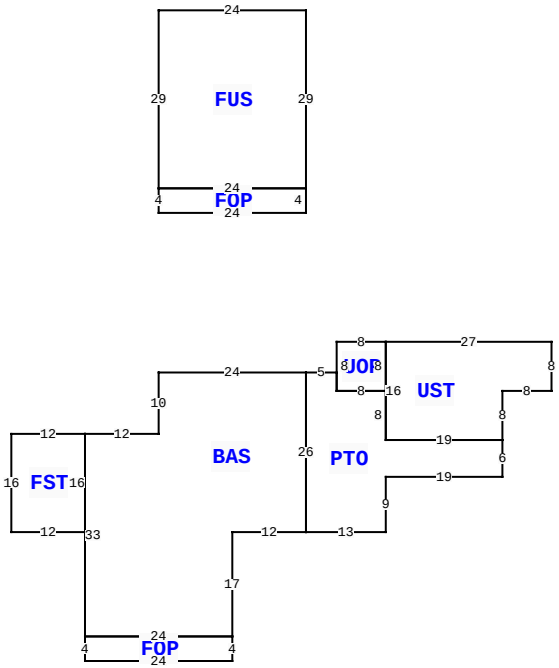

305 SW TRUDY WAY, FORT WHITE

BLD DATE		LGL DATE	
XF DATE		LAND DATE	04/07/2025 MLU
INC DATE		AG DATE	

VALUATION SUMMARY

VALUATION BY		STANDARD
Tax Group: 3	Tax Dist:	
BUILDING MARKET VALUE		191,855
TOTAL MARKET OB/XF VALUE		1,200
TOTAL LAND VALUE - MARKET		30,520
TOTAL MARKET VALUE		223,575
SOH/AGL Deduction		88,023
ASSESSED VALUE		135,552
TOTAL EXEMPTION VALUE	HX HB	50,722
BASE TAXABLE VALUE		84,830
TOTAL JUST VALUE		223,575
NCON VALUE		0
INCOME VALUE		
PREVIOUS YEAR MKT VALUE		223,575

PERMIT NUM	DESCRIPTION	AMT	ISSUED
000049656	Electrical Servic	0	04/19/2024
000043865	Roof Replacement	17,000	03/08/2022

SALES DATA

OFF RECORD Number	DATE	TYPE INST	Q U	V I	RSN CD	SALE PRICE
1377/1095	1/17/2019	QC	U	I	11	100
GRANTOR: MARK A & SUSAN D SHEL						
GRANTEE: MARK A & SUSAN D SH						
1054/0837	8/03/2005	WD	Q	I		145,000
GRANTOR: STEWART						
GRANTEE: SHELTON & SWEARS						

BUILDING NOTES

BUILDING DIMENSIONS

BAS= W24 S10 W12 FST= W12 S16 E12 N16$ S33 FOP= S4 E24N4 W24$ E24 N17 E12 PTO= E13N9 E19 N6 UST= N8 E8 N8 W27 S16 E19$ W19 N8 UOP= N8 W8 S8 E8$ W8 N3W5 S26$ N26$ PTR= N30 FUS= N29 W24 S29 FOP= S4 E24 N4 W24$ E24$S30$.

EXTRA FEATURES

LN	OB/XF CODE	DESCRIPTION	BLD	CAP	L	W	UNITS	UT	Adj R	ADJ UNIT PRICE	ORIG COND	YEAR ON	YEAR ACTUAL	Q	% COND	OB/XF MKT VALUE	NOTES
1	0190	FPLC PF	0	100	0	0	1.00	UT	1,200.00	1,200.00	100	1993	1993	3	100	1,200	

LAND DESCRIPTION

TOTAL OB/XF 1,200

LN	USE CODE	CLS	LAND USE DESCRIPTION	CAP	RD	LOC ZONE	FRONT	DEPTH	TOT LND UTS	UNIT TYPE	DT	DPTH FACT	% COND	TOT ADJ	UNIT PRICE	ADJ UNIT PRICE	LAND VALUE	OTHER ADJUSTMENTS AND NOTES	YEAR	DENSITY	DECL	FRZ	YR	CONSRV
1	0100	C	SFR	100		A-1	0.00	0.00	2.18	AC		1.00	1.00	1.00	14,000.00	14,000.00	30,520							

REVIEW DATE 12/02/2024 BY SYS Total Acres: 2.18 Total Land Value: 30,520 Market: 0 Agricultural: 0 Common: 30,520 PRINTED 11/17/2025 BY SYS