AKA LOT 5, BLOCK 9, WILSON SPRIN
PHASE 4 UNR: COMM AT NE COR OF S
1, W 33.01 FT TO W R/W OF WILSON

TRAN BRIAN HOANG/JOHNSTON ANDREW
170 SW LIZARD DR
FORT WHITE, FL 32038

2026

12-7S-15-01439-735

COLUMBIA COUNTY PROPERTY

BUILDING CHARACTERISTICS

ELEMENT	CD	CONSTRUCTION
Exterior Wall	31	VINYL SID 100
Roof Structur	08	IRREGULAR 100
Roof Cover	14	PREFIN MT 100
Interior Wall	05	DRYWALL 100
Interior Floo	14	CARPET 90
Interior Floo	08	SHT VINYL 10
Air Condition	03	CENTRAL 100
Heating Type	04	AIR DUCTED 100
Bedrooms		3 100
Bathrooms		2 100
Stories	1.	1. 100
Architectual	01	CONV 100
Units		0 100
Condition Adj	03	03 100
Quality	05	05
DOR CODE	0200	MOBILE HOME
MAP NUM		MKT AREA 02
NEIGHBORHOOD/LOC	6716.0400	1.00/

AREA TYPE	TOTAL GROSS AREA	PCT OF BASE	YEAR	TOT ADJ AREA	SUBAREA MARKET VALUE
BAS	314	100		314	29,445
BAS	440	100		440	41,260
BAS	1,188	100		1,188	111,403
FCP	320	25		80	7,502
FOP	36	35		13	1,219
FOP	48	35		17	1,594
FSP	537	40		215	20,162
UOP	80	25		20	1,875
TOTALS	2,963			2,287	214,459

MARKET ADJUSTMENTS

TYPE	MDL	EFF. AREA	TOT ADJ PTS	EFF. BASE RATE	REPL. COST NEW	AYB	EYB	ECON	FNCT		NORM	% COND
0202	02	2,287	119.9000	118.70	271,467	2010	2015	0	0	0	21.00	79.00

1 MANUF 2 0% - 2024 Heated Area: 1942 HX Base Yr

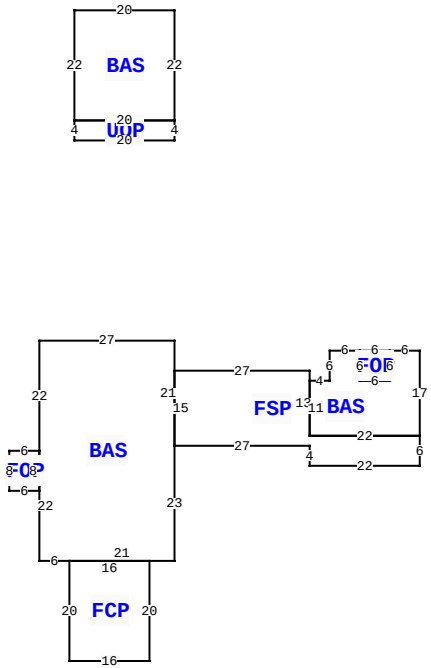

170 SW LIZARD DR, FORT WHITE

BLD DATE		LGL DATE	
XF DATE		LAND DATE	05/13/2025 MLU
INC DATE		AG DATE	

VALUATION SUMMARY

VALUATION BY	STANDARD
Tax Group: 3	Tax Dist:
BUILDING MARKET VALUE	214,459
TOTAL MARKET OB/XF VALUE	10,740
TOTAL LAND VALUE - MARKET	27,000
TOTAL MARKET VALUE	252,199
SOH/AGL Deduction	0
ASSESSED VALUE	252,199
TOTAL EXEMPTION VALUE	0
BASE TAXABLE VALUE	252,199
TOTAL JUST VALUE	252,199
NCON VALUE	0
INCOME VALUE	
PREVIOUS YEAR MKT VALUE	260,343

PERMIT NUM	DESCRIPTION	AMT	ISSUED
000042353	Roof Replacement	18,500	07/19/2021
28603	M H	425	05/26/2010

SALES DATA

OFF RECORD Number	DATE	TYPE INST	Q U	V I	RSN CD	SALE PRICE
1489/1085	4/27/2023	WD	Q	I	01	315,000
GRANTOR: COLSON RICHARD R						
GRANTEE: TRAN BRIAN HOANG						
1441/2133	7/06/2021	TR	U	I	30	100
GRANTOR: COLSON RICHARD R & EL						
GRANTEE: COLSON RICHARD R						

BUILDING NOTES

BUILDING DIMENSIONS

BAS= W27 S22 FOP= W6 S8 E6 N8$ S22 E6 FCP= S20 E16 N20 W16$ E21 N23 FSP= E27 S4 E22 N6 BAS= N17 W6 FOP= W6 S6 E6 N6$ S6 W6 N6 W6 S6 W4 S11 E22$ W22 N13 W27 S15$ N21$ PTR= N40 UOP= N4 BAS= N22 W20 S22 E20$ W20 S4 E20$ S40$.

EXTRA FEATURES

LN	OB/XF CODE	DESCRIPTION	BLD	CAP	L	W	UNITS	UT	Adj R	ADJ UNIT PRICE	ORIG COND	YEAR ON	YEAR ACTUAL	Q	% COND	OB/XF MKT VALUE	NOTES
1	0166	CONC,PAVMT	0	0	0	0	1.00	UT	0.00	0.00	100	0	0	3	100	800	
2	0060	CARPORT F	0	0	12	10	120.00	UT	3.50	3.50	100	0	0	3	100	420	
3	9945	Well/Sept	0	0	0	0	1.00	UT	7,000.00	7,000.00	100			3	100	7,000	
4	0296	SHED METAL	0	0	15	12	180.00	UT	9.00	9.00	100	0	0	3	100	1,620	
5	0040	BARN,POLE	0	0	8	5	40.00	UT	2.50	2.50	100	0	0	3	100	100	
6	0294	SHED WOOD/	0	0	10	8	80.00	UT	10.00	10.00	100	0	0	3	100	800	

LAND DESCRIPTION

TOTAL OB/XF 10,740

LN	USE CODE	CLS	LAND USE DESCRIPTION	CAP	RD	LOC ZONE	FRONT	DEPTH	TOT LND UTS	UNIT TYPE	DT	DPTH FACT	% COND	TOT ADJ	UNIT PRICE	ADJ UNIT PRICE	LAND VALUE	OTHER ADJUSTMENTS AND NOTES	YEAR	DENSITY	DECL	FRZ	YR	CONSRV
1	0260	C	MH-RIVER	0			0.00	0.00	1.00	LT		1.00	1.00	1.00	27,000.00	27,000.00	27,000							

REVIEW DATE 09/27/2023 BY TP Total Acres: 6.00 Total Land Value: 27,000 Market: 0 Agricultural: 0 Common: 27,000 PRINTED 11/11/2025 BY SYS