N1/2 OF S1/2 OF NW1/4 & THAT POR OF NW1/4 LYING S OF SE HIGH FALL CR-245.

BROWN MARY E
8515 SE CR 245
LAKE CITY, FL 32025

2026

12-5S-17-09217-002

BUILDING CHARACTERISTICS

ELEMENT	CD	CONSTRUCTION
Exterior Wall	19	COMMON BRK 100
Roof Structur	08	IRREGULAR 100
Roof Cover	03	COMP SHNGL 100
Interior Wall	05	DRYWALL 100
Interior Floo	14	CARPET 90
Interior Floo	15	HARDTILE 10
Air Condition	03	CENTRAL 100
Heating Type	04	AIR DUCTED 100
Bedrooms		3 100
Bathrooms		3 100
Frame	01	NONE 100
Stories	1.	1. 100
Architectual	05	CONV 100
Units		0 100
Condition Adj	03	03 100
Kitchen Adjus	01	01 100
Quality	07	07
DOR CODE	5000	IMPROVED AG
MAP NUM		MKT AREA 02
NEIGHBORHOOD/LOC	12517.00	1.00/

AREA TYPE	TOTAL GROSS AREA	PCT OF BASE	YEAR	TOT ADJ AREA	SUBAREA MARKET VALUE
BAS	2,277	100		2,277	224,308
FGR	527	55		290	28,568
FOP	384	30		115	11,328
FSP	720	40		288	28,371
FUS	455	100		455	44,822
PTO	264	5		13	1,281
TOTALS	4,627			3,438	338,679

MARKET ADJUSTMENTS

TYPE	MDL	EFF. AREA	TOT ADJ PTS	EFF. BASE RATE	REPL. COST NEW	AYB	EYB	ECON	FNCT		NORM	% COND
0100	01	3,438	122.1605	136.82	470,387	1997	1997	0	0	0	28.00	72.00

1 SINGLE FAM 100% - 0 Heated Area: 2732 HX Base Yr

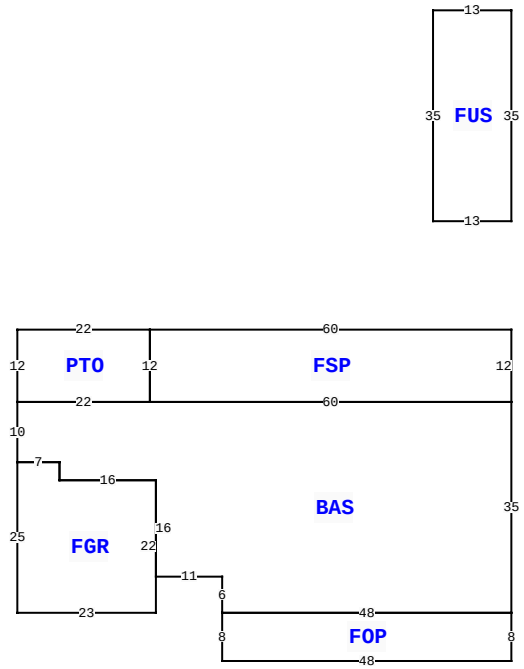

8515 SE COUNTY ROAD 245 , LAKE CITY

BLD DATE		LGL DATE	
XF DATE		LAND DATE	05/20/2024 MLU
INC DATE		AG DATE	

COLUMBIA COUNTY PROPERTY

PAGE 1 of 1 3

VALUATION SUMMARY

VALUATION BY		STANDARD
Tax Group: 3	Tax Dist:	
BUILDING MARKET VALUE		338,679
TOTAL MARKET OB/XF VALUE		6,008
TOTAL LAND VALUE - MARKET		391,500
TOTAL MARKET VALUE		369,765
SOH/AGL Deduction		130,696
ASSESSED VALUE		239,069
TOTAL EXEMPTION VALUE	HX HB VX VP	220,734
BASE TAXABLE VALUE		18,335
TOTAL JUST VALUE		736,187
NCON VALUE		0
INCOME VALUE		
PREVIOUS YEAR MKT VALUE		740,891

PERMIT NUM	DESCRIPTION	AMT	ISSUED
0910	SFR	320	03/20/1996

SALES DATA

OFF RECORD Number	DATE	TYPE INST	Q U	V I	RSN CD	SALE PRICE
1269/2312	2/07/2014	WD	U	V	11	100
GRANTOR: MARLIN M & DIANE M FE						
GRANTEE: WILLIAM F & MARY E						
0306/0251	5/01/1985	WD	Q	V	01	50,000
GRANTOR:						
GRANTEE:						

BUILDING NOTES

BUILDING DIMENSIONS

FSP= N12 W60 S12 E60$ BAS= W60 PTO= N12 W22 S12 E22$ W22S10 FGR= S25 E23 N22 W16 N3 W7$ E7 S3 E16 S16 E11 S6 FOP= S8 E48 N8 W48$ E48 N35 PTR= N30 FUS= N35 W13 S35 E13$ S30$.

EXTRA FEATURES

LN	OB/XF CODE	DESCRIPTION	BLD	CAP	L	W	UNITS	UT	Adj R	ADJ UNIT PRICE	ORIG COND	YEAR ON	YEAR ACTUAL	Q	% COND	OB/XF MKT VALUE	NOTES
1	0166	CONC,PAVMT	0	100	0	0	705.00	UT	1.50	1.50	100	1997	1997	3	100	1,058	
2	0296	SHED METAL	0	100	0	0	1.00	UT	300.00	300.00	50	2005	2005	3	50	150	
3	0180	FPLC 1STRY	0	100	0	0	1.00	UT	2,000.00	2,000.00	100	2005	2005	3	100	2,000	
4	0296	SHED METAL	0	100	0	0	1.00	UT	0.00	0.00	100	2017	2017	3	100	2,800	

LAND DESCRIPTION

TOTAL OB/XF 6,008

LN	USE CODE	CLS	LAND USE DESCRIPTION	CAP	RD	LOC ZONE	FRONT	DEPTH	TOT LND UTS	UNIT TYPE	DT	DPTH FACT	% COND	TOT ADJ	UNIT PRICE	ADJ UNIT PRICE	LAND VALUE	OTHER ADJUSTMENTS AND NOTES	YEAR	DENSITY	DECL	FRZ	YR	CONSRV
1	0100	C	SFR	100		A-1	0.00	0.00	1.00	AC		1.00	1.00	1.00	9,000.00	9,000.00	9,000							
2	5910	A	SWAMP/CYPRES	0		A-1	0.00	0.00	7.00	AC		1.00	1.00	1.00	40.00	40.00	280							
3	5500	A	TIMBER 2	0		A-1	0.00	0.00	35.50	AC		1.00	1.00	1.00	445.00	445.00	15,798							
4	9910	M	MKT.VAL.AG	0		A-1	0.00	0.00	42.50	AC		1.00	1.00	1.00	9,000.00	9,000.00	382,500							

REVIEW DATE 08/01/2017 BY DF Total Acres: 43.50 Total Land Value: 25,078 Market: 382,500 Agricultural: 16,078 Common: 9,000 PRINTED 11/18/2025 BY SYS