COMM AT NE COR OF SEC, RUN S 133
OF SE HIGH FALLS RD, SW ALONG R/
POB, CONT SW ALONG R/W 330 FT, S

GRAHAM WILLARD T/GRAHAM MARLENE M
3949 SE HIGH FALLS RD
LAKE CITY, FL 32025

2026

12-5S-17-09215-004

COLUMBIA COUNTY PROPERTY

BUILDING CHARACTERISTICS

ELEMENT	CD	CONSTRUCTION
Exterior Wall	16	WD FR STUC 90
Exterior Wall	21	STONE 10
Roof Structur	03	GABLE/HIP 100
Roof Cover	03	COMP SHNGL 100
Interior Wall	05	DRYWALL 100
Interior Floo	11	CLAY TILE 90
Interior Floo	12	HARDWOOD 10
Air Condition	03	CENTRAL 100
Heating Type	04	AIR DUCTED 100
Bedrooms		3 100
Bathrooms		2 100
Frame	02	WOOD FRAME 100
Stories	1.	1. 100
Architectual	05	CONV 100
Units		0 100
Condition Adj	03	03 100
Kitchen Adjus	01	01 100
Quality	07	07
DOR CODE	0100	SINGLE FAMILY
MAP NUM		MKT AREA 02
NEIGHBORHOOD/LOC	12517.00	1.00/

AREA TYPE	TOTAL GROSS AREA	PCT OF BASE	YEAR	TOT ADJ AREA	SUBAREA MARKET VALUE
BAS	1,309	100		1,309	136,053
FGR	530	55		292	30,349
FOP	50	30		15	1,559
FSP	192	40		77	8,003
FST	160	55		88	9,146
FST	352	55		194	20,164
FUS	730	100		730	75,874
TOTALS	3,323			2,705	281,149

MARKET ADJUSTMENTS

TYPE	MDL	EFF. AREA	TOT ADJ PTS	EFF. BASE RATE	REPL. COST NEW	AYB	EYB	ECON	FNCT		NORM	% COND
0100	01	2,705	128.0928	143.46	388,059	2006	2006	0	0	0	27.55	72.45

1 SINGLE FAM 100% - 2007 Heated Area: 2039 HX Base Yr 2007

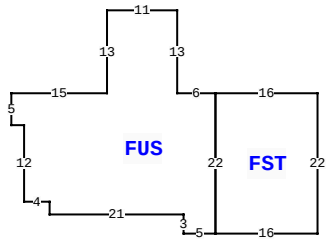

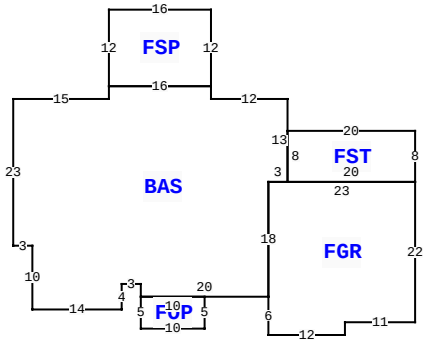

3949 SE HIGH FALLS RD, LAKE CITY

BLD DATE		LGL DATE	
XF DATE		LAND DATE	05/20/2024 MLU
INC DATE		AG DATE	

VALUATION SUMMARY

VALUATION BY		STANDARD
Tax Group: 3	Tax Dist:	
BUILDING MARKET VALUE		281,149
TOTAL MARKET OB/XF VALUE		7,865
TOTAL LAND VALUE - MARKET		50,000
TOTAL MARKET VALUE		339,014
SOH/AGL Deduction		96,430
ASSESSED VALUE		242,584
TOTAL EXEMPTION VALUE	HX HB	50,722
BASE TAXABLE VALUE		191,862
TOTAL JUST VALUE		339,014
NCON VALUE		0
INCOME VALUE		
PREVIOUS YEAR MKT VALUE		344,641

PERMIT NUM	DESCRIPTION	AMT	ISSUED
23735	SFR	691	10/19/2005

SALES DATA

OFF RECORD Number	DATE	TYPE INST	Q U /	V I /	RSN CD	SALE PRICE
1059/1251	5/21/2005	WD	Q	V	06	100

GRANTOR: MCCALL
GRANTEE: GRAHAM

BUILDING NOTES

BUILDING DIMENSIONS

BAS= W12 N2 FSP= N12 W16 S12 E16$ W16 S2 W15 S23 E3 S10 E14 N4 E3 S2 FOP= S5 E10 N5 W10$ E20 FGR= S6 E12 N2 E11 N22 W23 S18$ N18 E3 FST= E20 N8 W20 S8$ N13$ PTR= N30 FST= N22 W16 FUS= W6 N13 W11 S13 W15 S5 E2 S12 E4 S2 E21 S3 E5 N22$ S22 E16$ S30 $.

EXTRA FEATURES

LN	OB/XF CODE	DESCRIPTION	BLD	CAP	L	W	UNITS	UT	Adj R	ADJ UNIT PRICE	ORIG COND	YEAR ON	YEAR ACTUAL	Q	% COND	OB/XF MKT VALUE	NOTES
1	0166	CONC,PAVMT	0	100	0	0	2,906.00	UT	2.50	2.50	100	2006	2006	3	100	7,265	
2	0294	SHED WOOD/	0	100	0	0	1.00	UT	0.00	0.00	100	2017	2017	3	100	600	

LAND DESCRIPTION

TOTAL OB/XF 7,865

LN	USE CODE	CLS	LAND USE DESCRIPTION	CAP	RD	LOC ZONE	FRONT	DEPTH	TOT LND UTS	UNIT TYPE	DT	DPTH FACT	% COND	TOT ADJ	UNIT PRICE	ADJ UNIT PRICE	LAND VALUE	OTHER ADJUSTMENTS AND NOTES	YEAR	DENSITY	DECL	FRZ	YR	CONSRV
1	0100	C	SFR	100			0.00	0.00	5.00	AC		1.00	1.00	1.00	10,000.00	10,000.00	50,000							

REVIEW DATE 08/01/2017 BY DF Total Acres: 5.00 Total Land Value: 50,000 Market: 0 Agricultural: 0 Common: 50,000 PRINTED 11/19/2025 BY SYS