COMM SW COR, BEING ON C/L OF CR-
N 1230.33 FT, CONT N 349.31 FT,
FOR POB, CONT E 124.71 FT, S 349

THE PEREZ FAMILY TRUST DATED JANUARY 25, 2022
276 SW MARIA MARIE GLN
LAKE CITY, FL 32024

2026

12-5S-15-00447-402

COLUMBIA COUNTY PROPERTY

BUILDING CHARACTERISTICS

ELEMENT	CD	CONSTRUCTION
Exterior Wall	31	VINYL SID 100
Roof Structur	03	GABLE/HIP 100
Roof Cover	03	COMP SHNGL 100
Interior Wall	05	DRYWALL 100
Interior Floo	12	HARDWOOD 80
Interior Floo	15	HARDTILE 20
Air Condition	03	CENTRAL 100
Heating Type	04	AIR DUCTED 100
Bedrooms		4 100
Bathrooms		3 100
Frame	02	WOOD FRAME 100
Stories	1.	1. 100
Architectual	05	CONV 100
Units		0 100
Quality	05	05

DOR CODE	0100	SINGLE FAMILY	
MAP NUM		MKT AREA	02
NEIGHBORHOOD/LOC	12515.020	1.00/	

AREA TYPE	TOTAL GROSS AREA	PCT OF BASE	YEAR	TOT ADJ AREA	SUBAREA MARKET VALUE
BAS	2,186	100		2,186	210,126
FGR	462	55		254	24,416
FOP	114	30		34	3,268
PTO	476	5		24	2,307
TOTALS	3,238			2,498	240,116

MARKET ADJUSTMENTS

TYPE	MDL	EFF. AREA	TOT ADJ PTS	EFF. BASE RATE	REPL. COST NEW	AYB	EYB	ECON	FNCT		NORM	% COND
0100	01	2,498	110.7400	124.03	309,827	2007	2007	0	0	0	22.50	77.50

1 SINGLE FAM 100% - 2013 Heated Area: 2186 HX Base Yr 2013

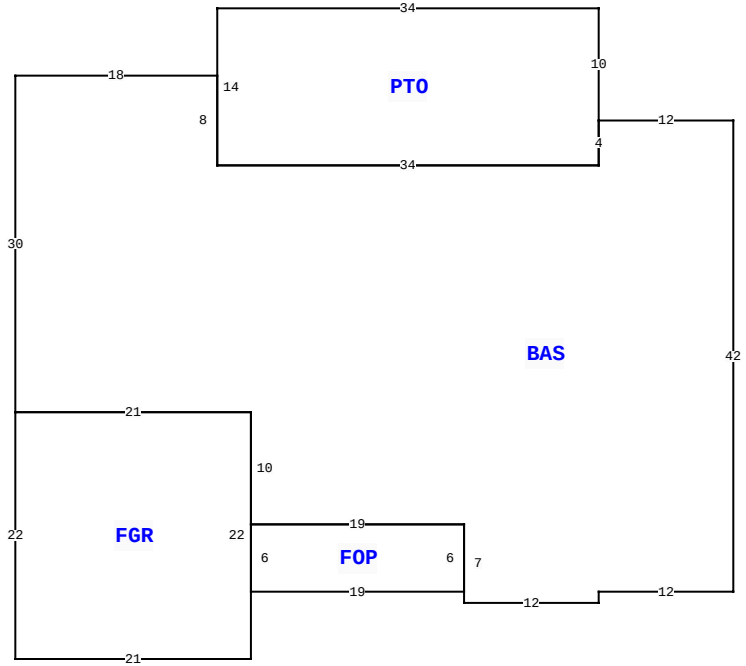

276 SW MARIA MARIE GLN, LAKE CITY

BLD DATE		LGL DATE	
XF DATE		LAND DATE	04/07/2025 MLU
INC DATE		AG DATE	

VALUATION SUMMARY

VALUATION BY		STANDARD
Tax Group: 3	Tax Dist:	
BUILDING MARKET VALUE		240,116
TOTAL MARKET OB/XF VALUE		5,250
TOTAL LAND VALUE - MARKET		14,000
TOTAL MARKET VALUE		259,366
SOH/AGL Deduction		83,147
ASSESSED VALUE		176,219
TOTAL EXEMPTION VALUE	HX HB VX DX	60,722
BASE TAXABLE VALUE		115,497
TOTAL JUST VALUE		259,366
NCON VALUE		0
INCOME VALUE		
PREVIOUS YEAR MKT VALUE		263,239

PERMIT NUM	DESCRIPTION	AMT	ISSUED
24805	SFR	652	07/31/2006

SALES DATA

OFF RECORD Number	DATE	TYPE INST	Q U	V I	RSN CD	SALE PRICE
1474/2420	8/16/2022	WD	U	I	11	100
GRANTOR: PEREZ ISABELLE TORRES						
GRANTEE: THE PEREZ FAMILY TR						
1066/0989	11/29/2005	WD	Q	V	06	100
GRANTOR: MIKULIC						
GRANTEE: PEREZ						

BUILDING NOTES

BUILDING DIMENSIONS

BAS= W12 PTO= N10 W34 S14 E34 N4$ S4 W34 N8 W18 S30 FGR= S22 E21 N22 W21$ E21 S10 FOP= S6 E19 N6 W19$ E19 S7 E12 N1 E12 N42$.

EXTRA FEATURES

LN	OB/XF CODE	DESCRIPTION	BLD	CAP	L	W	UNITS	UT	Adj R	ADJ UNIT PRICE	ORIG COND	YEAR ON	YEAR ACTUAL	Q	% COND	OB/XF MKT VALUE	NOTES
1	0180	FPLC 1STRY	0	100	0	0	1.00	UT	2,000.00	2,000.00	100	2007	2007	3	100	2,000	
2	0296	SHED METAL	0	100	0	0	1.00	UT	0.00	0.00	100	2013	2013	3	100	50	
3	0296	SHED METAL	0	100	0	0	1.00	UT	0.00	0.00	100	2016	2016	3	100	3,200	

LAND DESCRIPTION

TOTAL OB/XF 5,250

LN	USE CODE	CLS	LAND USE DESCRIPTION	CAP	RD	LOC ZONE	FRONT	DEPTH	TOT LND UTS	UNIT TYPE	DT	DPTH FACT	% COND	TOT ADJ	UNIT PRICE	ADJ UNIT PRICE	LAND VALUE	OTHER ADJUSTMENTS AND NOTES	YEAR	DENSITY	DECL	FRZ	YR	CONSRV
1	0100	C	SFR	100		A-1	0.00	0.00	1.00	AC		1.00	1.00	1.00	14,000.00	14,000.00	14,000							

REVIEW DATE 07/13/2016 BY DF Total Acres: 1.00 Total Land Value: 14,000 Market: 0 Agricultural: 0 Common: 14,000 PRINTED 11/06/2025 BY SYS