LOT 15 SOUTHERN LANDINGS
AVIATION S/D.

ZAHNLE RALPH J JR/ZAHNLE MARICHRIS
219 SW PLANTATION TER
LAKE CITY, FL 32025

2026

12-4S-16-02941-115

BUILDING CHARACTERISTICS

ELEMENT	CD	CONSTRUCTION
Exterior Wall	17	MSNRY STUC 100
Roof Structur	03	GABLE/HIP 100
Roof Cover	03	COMP SHNGL 100
Interior Wall	05	DRYWALL 100
Interior Floo	12	HARDWOOD 80
Interior Floo	14	CARPET 20
Air Condition	03	CENTRAL 100
Heating Type	04	AIR DUCTED 100
Bedrooms		3 100
Bathrooms		3 100
Frame	02	WOOD FRAME 100
Stories	1.	1. 100
Architectual	05	CONV 100
Units		0 100
Condition Adj	03	03 100
Kitchen Adjus	01	01 100
Quality	06	06
DOR CODE	0100	SINGLE FAMILY
MAP NUM		MKT AREA 06
NEIGHBORHOOD/LOC	12416.00	1.00/

AREA TYPE	TOTAL GROSS AREA	PCT OF BASE	YEAR	TOT ADJ AREA	SUBAREA MARKET VALUE
BAS	2,493	100		2,493	257,626
FGR	528	55		290	29,968
FOP	82	30		25	2,584
FSP	142	40		57	5,890
HGR	1,800	45		810	83,705
UOP	399	20		80	8,267
TOTALS	5,444			3,755	388,041

MARKET ADJUSTMENTS

TYPE	MDL	EFF. AREA	TOT ADJ PTS	EFF. BASE RATE	REPL. COST NEW	AYB	EYB	ECON	FNCT		NORM	% COND
0100	01	3,755	113.9145	127.58	479,063	2006	2006	0	0	0	19.00	81.00

1 SINGLE FAM 100% - 2011 Heated Area: 2493 HX Base Yr 2011

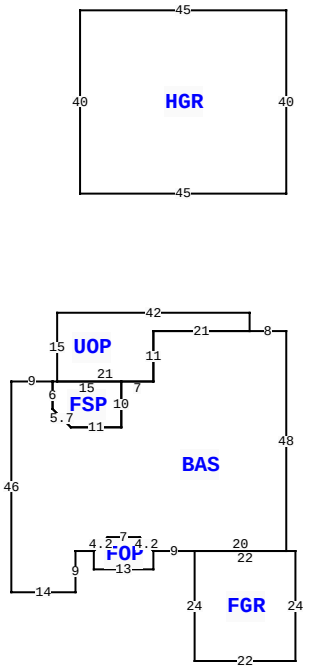

219 SW PLANTATION TER, LAKE CITY

BLD DATE		LGL DATE	
XF DATE		LAND DATE	04/03/2025 MLU
INC DATE		AG DATE	

COLUMBIA COUNTY PROPERTY

PAGE 1 of 1 2

VALUATION SUMMARY

VALUATION BY		STANDARD
Tax Group: 2	Tax Dist:	
BUILDING MARKET VALUE		388,041
TOTAL MARKET OB/XF VALUE		49,867
TOTAL LAND VALUE - MARKET		35,000
TOTAL MARKET VALUE		472,908
SOH/AGL Deduction		151,832
ASSESSED VALUE		321,076
TOTAL EXEMPTION VALUE	HX HB	50,722
BASE TAXABLE VALUE		270,354
TOTAL JUST VALUE		472,908
NCON VALUE		0
INCOME VALUE		
PREVIOUS YEAR MKT VALUE		479,043

PERMIT NUM	DESCRIPTION	AMT	ISSUED
000050969	Remodel	5,200	10/04/2024
000050909	Roof Replacement	36,000	09/25/2024
000050908	Roof Replacement	23,000	09/25/2024
31503	POOL	200	10/08/2013
23631	SFR	716	09/21/2005

SALES DATA

OFF RECORD Number	DATE	TYPE INST	Q U	V I	RSN CD	SALE PRICE
1194/0372	5/11/2010	WD	Q	I	01	286,900
GRANTOR: K & H DEVELOPMENT						
GRANTEE: RALPH J JR & MARICH						
1052/1044	7/19/2005	WD	Q	V	01	100
GRANTOR: GEORGE KERCE						
GRANTEE: K & M DEVELOPMENT						

BUILDING NOTES

BUILDING DIMENSIONS

BAS= W8 UOP= N4 W42 S15 E21 N11 E21$ W21 S11 W7 FSP= W15 S6 D4 R4 E11 N10 $ S10 W11 L4 U4 N6 W9 S46 E14 N9 E4 FOP= S4 E13 N4 U3 L3 W7 L3 D3 $ U3 R3 E7 R3 D3 E9 FGR= S24 E22 N24 W22$ E20 N48$ PTR= N30 HGR= N40 W45 S40 E45$ S30$.

EXTRA FEATURES

LN	OB/XF CODE	DESCRIPTION	BLD	CAP	L	W	UNITS	UT	Adj R	ADJ UNIT PRICE	ORIG COND	YEAR ON	YEAR ACTUAL	Q	% COND	OB/XF MKT VALUE	NOTES
1	0190	FPLC PF	0	100	0	0	1.00	UT	1,200.00	1,200.00	100	2006	2006	3	100	1,200	
2	0166	CONC,PAVMT	0	100	0	0	5,164.00	UT	2.50	2.50	90	2006	2006	3	90	11,619	
3	0280	POOL R/CON	0	100	16	40	640.00	UT	70.00	70.00	100	2014	2014	3	76	34,048	
4	0169	FENCE/WOOD	0	100	0	0	1.00	UT	0.00	0.00	100	2019	2019	3	100	2,500	
5	0166	CONC,PAVMT	0	100	0	0	1.00	UT	500.00	500.00	100	2024	2023		100	500	

LAND DESCRIPTION

TOTAL OB/XF 49,867

LN	USE CODE	CLS	LAND USE DESCRIPTION	CAP	RD	LOC ZONE	FRONT	DEPTH	TOT LND UTS	UNIT TYPE	DT	DPTH FACT	% COND	TOT ADJ	UNIT PRICE	ADJ UNIT PRICE	LAND VALUE	OTHER ADJUSTMENTS AND NOTES	YEAR	DENSITY	DECL	FRZ	YR	CONSRV
1	0100	C	SFR	100		RSF/MH	0.00	0.00	1.00	LT		1.00	1.00	1.00	35,000.00	35,000.00	35,000							

REVIEW DATE 10/25/2023 BY JB Total Acres: 0.66 Total Land Value: 35,000 Market: 0 Agricultural: 0 Common: 35,000 PRINTED 10/03/2025 BY SYS