LOT 5 SOUTHERN LANDINGS
AVIATION S/D. WD 1043-1773,
WD 1152-203, WD 132-300, WD

TORRES DOMINGO J/TORRES CARMEN B
120 SW VOYAGER CT
LAKE CITY, FL 32025

2026

12-4S-16-02941-105

COLUMBIA COUNTY PROPERTY

BUILDING CHARACTERISTICS

ELEMENT	CD	CONSTRUCTION
Exterior Wall	31	VINYL SID 100
Roof Structur	08	IRREGULAR 100
Roof Cover	12	MODULAR MT 100
Interior Wall	05	DRYWALL 100
Interior Floo	14	CARPET 90
Interior Floo	15	HARDTILE 10
Air Condition	03	CENTRAL 100
Heating Type	04	AIR DUCTED 100
Bedrooms		3 100
Bathrooms		2 100
Frame	02	WOOD FRAME 100
Stories	1.	1. 100
Architectual	05	CONV 100
Units		0 100
Condition Adj	03	03 100
Kitchen Adjus	01	01 100
Quality	06	06
DOR CODE	0100	SINGLE FAMILY
MAP NUM		MKT AREA 06
NEIGHBORHOOD/LOC	12416.00	1.00/

AREA TYPE	TOTAL GROSS AREA	PCT OF BASE	YEAR	TOT ADJ AREA	SUBAREA MARKET VALUE
BAS	500	100		500	51,395
BAS	1,848	100		1,848	189,954
FGR	621	55		342	35,154
FOP	448	30		134	13,774
FSP	768	40		307	31,557
HGR	2,000	45		900	92,510
TOTALS	6,185			4,031	414,344

MARKET ADJUSTMENTS

TYPE	MDL	EFF. AREA	TOT ADJ PTS	EFF. BASE RATE	REPL. COST NEW	AYB	EYB	ECON	FNCT		NORM	% COND
0100	01	4,031	112.9516	126.51	509,962	2006	2010	0	0	0	18.75	81.25

1 SINGLE FAM 100% - 2021 Heated Area: 2348 HX Base Yr 2021

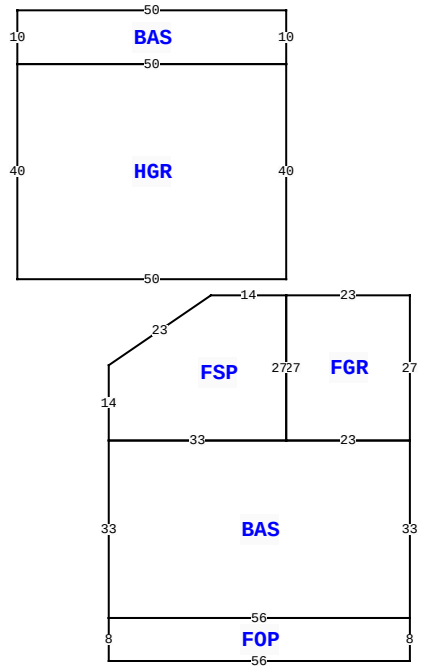

120 SW VOYAGER CT, LAKE CITY

BLD DATE		LGL DATE	
XF DATE		LAND DATE	04/03/2025 MLU
INC DATE		AG DATE	

VALUATION SUMMARY

VALUATION BY		STANDARD
Tax Group: 2	Tax Dist:	
BUILDING MARKET VALUE		414,344
TOTAL MARKET OB/XF VALUE		6,230
TOTAL LAND VALUE - MARKET		35,000
TOTAL MARKET VALUE		455,574
SOH/AGL Deduction		181,226
ASSESSED VALUE		274,348
TOTAL EXEMPTION VALUE	HX HB	50,722
BASE TAXABLE VALUE		223,626
TOTAL JUST VALUE		455,574
NCON VALUE		0
INCOME VALUE		
PREVIOUS YEAR MKT VALUE		461,949

PERMIT NUM	DESCRIPTION	AMT	ISSUED
000048093	Roof Replacement	21,600	09/12/2023
000048094	Roof Replacement	16,800	09/12/2023
25042	POOL	120	09/28/2006
23350	SFR	569	07/01/2005

SALES DATA

OFF RECORD Number	DATE	TYPE INST	Q U	V I	RSN CD	SALE PRICE
1379/0810	2/28/2019	WD	Q	I	01	331,500
GRANTOR: FREDRICK & LEE ANN EL						
GRANTEE: DOMINGO J & CARMEN						
1312/0300	3/24/2016	WD	Q	I	01	250,000
GRANTOR: TAMARA HORTON						
GRANTEE: FREDRICK & LEE ANN						

BUILDING NOTES

BUILDING DIMENSIONS

BAS= W33 S33 FOP= S8 E56 N8 W56$ E56 N33 FGR= N27 W23 FSP= W14 L19 D13 S14 E33 N27$ S27 E23$ W23$ PTR= N30 HGR= N40 BAS= N10 W50 S10 E50$ W50 S40 E50$ S30$.

EXTRA FEATURES

LN	OB/XF CODE	DESCRIPTION	BLD	CAP	L	W	UNITS	UT	Adj R	ADJ UNIT PRICE	ORIG COND	YEAR ON	YEAR ACTUAL	Q	% COND	OB/XF MKT VALUE	NOTES
1	0180	FPLC 1STRY	0	100	0	0	1.00	UT	2,000.00	2,000.00	100	2006	2006	3	100	2,000	
2	0166	CONC,PAVMT	0	100	0	0	1,692.00	UT	2.50	2.50	100	2006	2006	3	100	4,230	

LAND DESCRIPTION

TOTAL OB/XF 6,230

LN	USE CODE	CLS	LAND USE DESCRIPTION	CAP	RD	LOC ZONE	FRONT	DEPTH	TOT LND UTS	UNIT TYPE	DT	DPTH FACT	% COND	TOT ADJ	UNIT PRICE	ADJ UNIT PRICE	LAND VALUE	OTHER ADJUSTMENTS AND NOTES	YEAR	DENSITY	DECL	FRZ	YR	CONSRV
1	0100	C	SFR	100		RSF/MH	0.00	0.00	1.00	LT		1.00	1.00	1.00	35,000.00	35,000.00	35,000							

REVIEW DATE 10/11/2023 BY jerry Total Acres: 0.50 Total Land Value: 35,000 Market: 0 Agricultural: 0 Common: 35,000 PRINTED 11/14/2025 BY SYS