LOT 4 SOUTHERN LANDINGS
AVIATION S/D. WD 1048-153,
WD 1409-2523

ELFERS FREDRICK TRUSTEE OF THE
FREDRICK ELFERS REV LIV TRUST, 381 SW BROTHER LN
LAKE CITY, FL 32025

2026

12-4S-16-02941-104

COLUMBIA COUNTY PROPERTY

BUILDING CHARACTERISTICS

ELEMENT	CD	CONSTRUCTION
Exterior Wall	32	HARDIE BRD 100
Exterior Wall	00	N/A 0
Roof Structur	08	IRREGULAR 100
Roof Cover	03	COMP SHNGL 100
Interior Wall	05	DRYWALL 100
Interior Floo	13	LAM/VNLPLK 100
Interior Floo	00	N/A 0
Air Condition	03	CENTRAL 100
Heating Type	04	AIR DUCTED 100
Bedrooms		3.5 100
Bathrooms		2 100
Frame	02	WOOD FRAME 100
Stories	1.	1. 100
Units		0 100
Condition Adj	03	03 100
Kitchen Adjus	01	01 100
Quality	05	05
DOR CODE	0100	SINGLE FAMILY
MAP NUM		MKT AREA 06
NEIGHBORHOOD/LOC	12416.00	1.00/

AREA TYPE	TOTAL GROSS AREA	PCT OF BASE	YEAR	TOT ADJ AREA	SUBAREA MARKET VALUE
BAS	91	100	2025	91	11,099
BAS	2,730	100	2025	2,730	332,973
FGR	312	55	2025	172	20,978
FGR	795	55	2025	437	53,300
FSP	200	40	2025	80	9,757
FSP	603	40	2025	241	29,394
FSP	1,059	40	2025	424	51,715
FST	169	55	2025	93	11,343
HGR	1,960	45	2025	882	107,575
TOTALS	7,919			5,150	628,135

MARKET ADJUSTMENTS

TYPE	MDL	EFF. AREA	TOT ADJ PTS	EFF. BASE RATE	REPL. COST NEW	AYB	EYB	ECON	FNCT		NORM	% COND
0100	01	5,150	110.0000	123.20	634,480	2024	2024	0	0	0	1.00	99.00

1 SINGLE FAM 0% - 2025 Heated Area: 2821 HX Base Yr

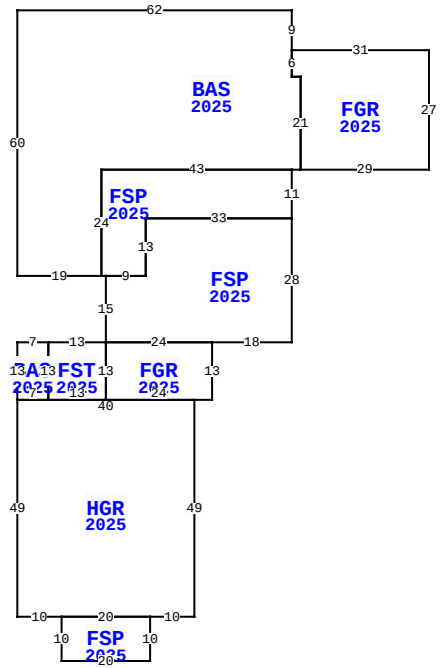

381 SW BROTHERS LN, LAKE CITY

BLD DATE		LGL DATE	
XF DATE		LAND DATE	04/03/2025 MLU
INC DATE		AG DATE	

VALUATION SUMMARY

VALUATION BY	STANDARD
Tax Group: 2	Tax Dist:
BUILDING MARKET VALUE	628,135
TOTAL MARKET OB/XF VALUE	10,800
TOTAL LAND VALUE - MARKET	28,000
TOTAL MARKET VALUE	666,935
SOH/AGL Deduction	0
ASSESSED VALUE	666,935
TOTAL EXEMPTION VALUE	0
BASE TAXABLE VALUE	666,935
TOTAL JUST VALUE	666,935
NCON VALUE	0
INCOME VALUE	
PREVIOUS YEAR MKT VALUE	673,280

PERMIT NUM	DESCRIPTION	AMT	ISSUED
000052756	Screen Enclosure	26,400	03/28/2025
000048768	New Residential C	858,600	12/01/2023

SALES DATA

OFF RECORD Number	DATE	TYPE INST	Q U	V I	RSN CD	SALE PRICE
1409/2523	4/13/2020	WD	Q	V	01	17,000
GRANTOR: ELCEE LLC						
GRANTEE: FREDRICK ELFERS TRU						
1048/0153	6/02/2005	WD	Q	V		74,500
GRANTOR: DOUGLAS						
GRANTEE: ELCEE LLC						

BUILDING NOTES

EXTRA FEATURES

LN	OB/XF CODE	DESCRIPTION	BLD	CAP	L	W	UNITS	UT	Adj R	ADJ UNIT PRICE	ORIG COND	YEAR ON	YEAR ACTUAL	Q	% COND	OB/XF MKT VALUE	NOTES
1	0166	CONC,PAVMT	0	0	0	0	3,600.00	UT	3.00	3.00	100	2025	2024		100	10,800	

BUILDING DIMENSIONS

FGR=[YR=2025;ORIG=-20,-11] W31 S6 E2 S21 E29 N27 $
FGR=[YR=2025;ORIG=-93,55] E24 S13 W24 N13 $
FSP=[YR=2025;ORIG=-103,117] E20 S10 W20 N10 $
FST=[YR=2025;ORIG=-106,55] E13 S13 W13 N13 $
BAS=[YR=2025;ORIG=-113,55] E7 S13 W7 N13 $
BAS=[YR=2025;ORIG=-51,-20] W62 S60 E19 N24 E43 E2 N21 W2 N6 N9 $
FSP=[YR=2025;ORIG=-51,27] W33 S13 W9 S15 E24 E18 N28 $
FSP=[YR=2025;ORIG=-51,16] W43 S24 E1 E9 N13 E33 N11 $
HGR=[YR=2025;ORIG=-73,68] W40 S49 E10 E20 E10 N49 $
.

LAND DESCRIPTION

TOTAL OB/XF 10,800

LN	USE CODE	CLS	LAND USE DESCRIPTION	CAP	RD	LOC ZONE	FRONT	DEPTH	TOT LND UTS	UNIT TYPE	DT	DPTH FACT	% COND	TOT ADJ	UNIT PRICE	ADJ UNIT PRICE	LAND VALUE	OTHER ADJUSTMENTS AND NOTES	YEAR	DENSITY	DECL	FRZ	YR	CONSRV
1	0100	C	SFR	0		RSF/MH	0.00	0.00	1.00	LT		1.00	1.00	0.80	35,000.00	28,000.00	28,000							

REVIEW DATE 06/03/2025 BY chuck Total Acres: 0.68 Total Land Value: 28,000 Market: 0 Agricultural: 0 Common: 28,000 PRINTED 10/02/2025 BY SYS