LOT 31 CREEKSIDE S/D.
1002-217, DC 1327-1376, PB 1329-

CORTES MARIBEL/GOMEZ HENRY ALBERTO
200 SW INWOOD CT
LAKE CITY, FL 32025

2026

12-4S-16-02939-131

COLUMBIA COUNTY PROPERTY

BUILDING CHARACTERISTICS

ELEMENT	CD	CONSTRUCTION
Exterior Wall	19	COMMON BRK 100
Roof Structur	08	IRREGULAR 100
Roof Cover	03	COMP SHNGL 100
Interior Wall	05	DRYWALL 100
Interior Floo	14	CARPET 90
Interior Floo	15	HARDTILE 10
Air Condition	03	CENTRAL 100
Heating Type	04	AIR DUCTED 100
Bedrooms		3 100
Bathrooms		2 100
Frame	02	WOOD FRAME 100
Stories	1.	1. 100
Architectual	05	CONV 100
Units		0 100
Condition Adj	03	03 100
Kitchen Adjus	01	01 100
Quality	05	05
DOR CODE	0100	SINGLE FAMILY
MAP NUM		MKT AREA 06
NEIGHBORHOOD/LOC	12416.00	1.00/

AREA TYPE	TOTAL GROSS AREA	PCT OF BASE	YEAR	TOT ADJ AREA	SUBAREA MARKET VALUE
BAS	1,794	100		1,794	181,086
FGR	484	55		266	26,850
FOP	224	30		67	6,763
FSP	70	40		28	2,826
TOTALS	2,572			2,155	217,526

MARKET ADJUSTMENTS

TYPE	MDL	EFF. AREA	TOT ADJ PTS	EFF. BASE RATE	REPL. COST NEW	AYB	EYB	ECON	FNCT		NORM	% COND
0100	01	2,155	115.5420	129.41	278,879	2003	2003	0	0	0	22.00	78.00

1 SINGLE FAM 0% - 0 Heated Area: 1794 HX Base Yr

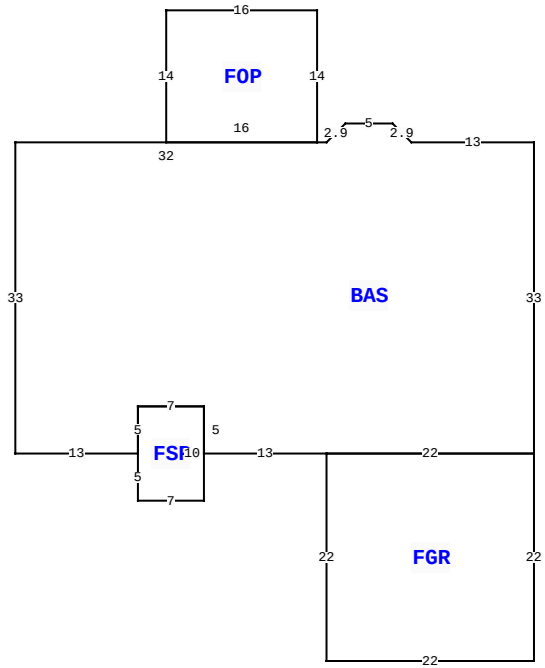

200 SW INWOOD CT, LAKE CITY

BLD DATE		LGL DATE	
XF DATE		LAND DATE	04/03/2025 MLU
INC DATE		AG DATE	

VALUATION SUMMARY

VALUATION BY	STANDARD
Tax Group: 2	Tax Dist:
BUILDING MARKET VALUE	217,526
TOTAL MARKET OB/XF VALUE	9,868
TOTAL LAND VALUE - MARKET	35,000
TOTAL MARKET VALUE	262,394
SOH/AGL Deduction	0
ASSESSED VALUE	262,394
TOTAL EXEMPTION VALUE	0
BASE TAXABLE VALUE	262,394
TOTAL JUST VALUE	262,394
NCON VALUE	0
INCOME VALUE	
PREVIOUS YEAR MKT VALUE	265,182

PERMIT NUM	DESCRIPTION	AMT	ISSUED
000051794	Generator	0	12/12/2024
000045309	Roof Replacement	16,458	08/29/2022
20948	SFR	314	08/04/2003

SALES DATA

OFF RECORD Number	DATE	TYPE INST	Q U	V I	RSN CD	SALE PRICE
1378/2069	2/20/2019	WD	U	I	16	156,000
GRANTOR: J BURKE& J JOHNSON& D						
GRANTEE: M CORTES & H A GOME						
1378/2068	1/08/2019	WD	U	I	16	39,000
GRANTOR: JOANNE M AKE						
GRANTEE: M CORTES & H A GOME						

BUILDING NOTES

BUILDING DIMENSIONS

BAS=[ORIG=0,0] W13 U2L2 W5 D2L2 W1 W32 S33 E13 N5 E7 S5 E13 E22 N33 $
FGR=[ORIG=-22,33] S22 E22 N22 W22 $
FOP=[ORIG=-23,0] N14 W16 S14 E16 $
FSP=[ORIG=-42,33] S5 E7 N10 W7 S5 $
.

EXTRA FEATURES

LN	OB/XF CODE	DESCRIPTION	BLD	CAP	L	W	UNITS	UT	Adj R	ADJ UNIT PRICE	ORIG COND	YEAR ON	YEAR ACTUAL	Q	% COND	OB/XF MKT VALUE	NOTES
1	0166	CONC,PAVMT	0	0	0	0	1,384.00	UT	4.50	4.50	100	2003	2003	3	100	6,228	
2	0060	CARPORT F	0	0	18	40	720.00	UT	4.50	4.50	100	2009	2009	3	100	3,240	
3	0258	PATIO	0	0	0	0	1.00	UT	400.00	400.00	100	2024	2023		100	400	

LAND DESCRIPTION

TOTAL OB/XF 9,868

LN	USE CODE	CLS	LAND USE DESCRIPTION	CAP	RD	LOC ZONE	FRONT	DEPTH	TOT LND UTS	UNIT TYPE	DT	DPTH FACT	% COND	TOT ADJ	UNIT PRICE	ADJ UNIT PRICE	LAND VALUE	OTHER ADJUSTMENTS AND NOTES	YEAR	DENSITY	DECL	FRZ	YR	CONSRV
1	0100	C	SFR	0		RSF-2	0.00	0.00	1.00	LT		1.00	1.00	1.00	35,000.00	35,000.00	35,000							

REVIEW DATE 10/13/2023 BY KS Total Acres: 0.52 Total Land Value: 35,000 Market: 0 Agricultural: 0 Common: 35,000 PRINTED 11/18/2025 BY SYS