LOT 3 CANNON CREEK ESTATES.
731-309, 794-1065, QC 1034-1539,

ISHERWOOD RAYMOND
337 SW LOCKHEED LN
LAKE CITY, FL 32025

2026

12-4S-16-02935-119

COLUMBIA COUNTY PROPERTY

BUILDING CHARACTERISTICS

ELEMENT	CD	CONSTRUCTION
Exterior Wall	12	CEDAR 100
Roof Structur	08	IRREGULAR 100
Roof Cover	03	COMP SHNGL 100
Interior Wall	06	CUST PANEL 100
Interior Floo	14	CARPET 50
Interior Floo	15	HARDTILE 50
Air Condition	03	CENTRAL 100
Heating Type	04	AIR DUCTED 100
Bedrooms		3 100
Bathrooms		2 100
Frame	01	NONE 100
Stories	1.	1. 100
Architectual	05	CONV 100
Units		0 100
Condition Adj	03	03 100
Kitchen Adjus	01	01 100
Quality	07	07
DOR CODE	0100	SINGLE FAMILY
MAP NUM		MKT AREA 06
NEIGHBORHOOD/LOC	12416.020	1.00/

AREA TYPE	TOTAL GROSS AREA	PCT OF BASE	YEAR	TOT ADJ AREA	SUBAREA MARKET VALUE
BAS	1,998	100		1,998	196,193
FGR	480	55		264	25,923
FOP	150	30		45	4,419
FSP	276	40		110	10,802
HGR	2,000	45		900	88,375
TOTALS	4,904			3,317	325,712

MARKET ADJUSTMENTS

TYPE	MDL	EFF. AREA	TOT ADJ PTS	EFF. BASE RATE	REPL. COST NEW	AYB	EYB	ECON	FNCT		NORM	% COND
0100	01	3,317	132.8415	148.78	493,503	1991	1991	0	0	0	34.00	66.00

1 SINGLE FAM 100% - 2018 Heated Area: 1998 HX Base Yr 2018

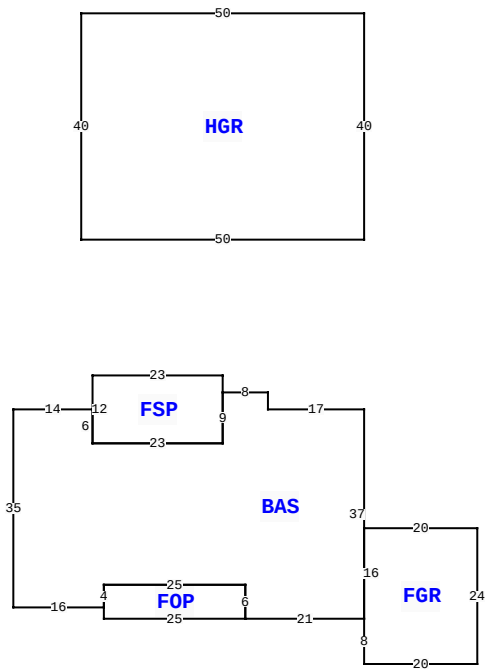

337 SW LOCKHEED LN, LAKE CITY

BLD DATE		LGL DATE	
XF DATE		LAND DATE	
INC DATE		AG DATE	

VALUATION SUMMARY

VALUATION BY		STANDARD
Tax Group: 2	Tax Dist:	
BUILDING MARKET VALUE		325,712
TOTAL MARKET OB/XF VALUE		8,930
TOTAL LAND VALUE - MARKET		105,660
TOTAL MARKET VALUE		440,302
SOH/AGL Deduction		77,704
ASSESSED VALUE		362,598
TOTAL EXEMPTION VALUE	HX HB	50,722
BASE TAXABLE VALUE		311,876
TOTAL JUST VALUE		440,302
NCON VALUE		0
INCOME VALUE		
PREVIOUS YEAR MKT VALUE		445,237

SALE:3:1: S 3 ACRES LOT 3, CANNON CREEK ESTATES

SALE:2:1: S 3 AC LOT 3 CANNON CREEK (TOTAL SALE 21

SALE:1:1: LOT 3 EX S 3 AC (TOTAL SALE $213,000)

PERMIT NUM	DESCRIPTION	AMT	ISSUED

SALES DATA

OFF RECORD Number	DATE	TYPE INST	Q U	V I	RSN CD	SALE PRICE
1034/1541	12/21/2004	WD	Q	I		432,500
GRANTOR: LINDA & EDWARD HART						
GRANTEE: RAYMOND & JEANNE AN						
0795/0787	9/07/1994	WD	U	V	34	23,000
GRANTOR: EARL & FAYE M PEELER						
GRANTEE: ROBERT B & LINDA MC						

BUILDING NOTES

BUILDING DIMENSIONS

BAS= W17 N3 W8 FSP= N3 W23 S12 E23 N9$ S9 W23 N6 W14 S35 E16 FOP= S2 E25 N6 W25 S4$ N4E25 S6 E21 FGR= S8 E20 N24 W20 S16$ N37$ PTR= N30 HGR= N40 W50 S40 E50$ S30$.

EXTRA FEATURES

LN	OB/XF CODE	DESCRIPTION	BLD	CAP	L	W	UNITS	UT	Adj R	ADJ UNIT PRICE	ORIG COND	YEAR ON	YEAR ACTUAL	Q	% COND	OB/XF MKT VALUE	NOTES
1	0180	FPLC 1STRY	0	100	0	0	1.00	UT	2,000.00	2,000.00	100	0	0	3	100	2,000	
2	0166	CONC,PAVMT	0	100	20	18	360.00	UT	2.00	2.00	100	0	0	3	100	720	
3	0166	CONC,PAVMT	0	100	45	69	3,105.00	UT	2.00	2.00	100	0	0	3	100	6,210	

LAND DESCRIPTION

TOTAL OB/XF 8,930

LN	USE CODE	CLS	LAND USE DESCRIPTION	CAP	RD	LOC ZONE	FRONT	DEPTH	TOT LND UTS	UNIT TYPE	DT	DPTH FACT	% COND	TOT ADJ	UNIT PRICE	ADJ UNIT PRICE	LAND VALUE	OTHER ADJUSTMENTS AND NOTES	YEAR	DENSITY	DECL	FRZ	YR	CONSRV
1	0100	C	SFR	100		RSF-1	0.00	0.00	5.87	AC		1.00	1.00	1.00	18,000.00	18,000.00	105,660							

REVIEW DATE 11/03/2023 BY JB Total Acres: 5.87 Total Land Value: 105,660 Market: 0 Agricultural: 0 Common: 105,660 PRINTED 10/02/2025 BY SYS