THE EASTERN MOST 1/2 OF LOT 14 C
ESTATES S/D.

PIERSOL JOHN R AND KATHRYN P LIVING TRUST DATED JU
167 SW CONFEDERATE GLN
LAKE CITY, FL 32025

**2026**

**12-4S-16-02935-118**

## COLUMBIA COUNTY PROPERTY



## BUILDING CHARACTERISTICS

| ELEMENT | CD | CONSTRUCTION |
|---|---|---|
| Exterior Wall | 10 | ABOVE AVG. 80 |
| Exterior Wall | 19 | COMMON BRK 20 |
| Roof Structur | 03 | GABLE/HIP 100 |
| Roof Cover | 03 | COMP SHNGL 100 |
| Interior Wall | 05 | DRYWALL 100 |
| Interior Floo | 14 | CARPET 90 |
| Interior Floo | 08 | SHT VINYL 10 |
| Air Condition | 03 | CENTRAL 100 |
| Heating Type | 04 | AIR DUCTED 100 |
| Bedrooms | | 3 100 |
| Bathrooms | | 2.5 100 |
| Frame | 01 | NONE 100 |
| Stories | 1. | 1. 100 |
| Architectual | 05 | CONV 100 |
| Units | | 0 100 |
| Condition Adj | 03 | 03 100 |
| Kitchen Adjus | 01 | 01 100 |
| Quality | 05 | 05 |
| DOR CODE | 0100 | SINGLE FAMILY |
| MAP NUM | | MKT AREA 06 |
| NEIGHBORHOOD/LOC | 12416.020 | 1.00/ |

| AREA TYPE | TOTAL GROSS AREA | PCT OF BASE | YEAR | TOT ADJ AREA | SUBAREA MARKET VALUE |
|---|---|---|---|---|---|
| BAS | 322 | 100 | | 322 | 24,664 |
| BAS | 2,288 | 100 | | 2,288 | 175,252 |
| FGR | 494 | 55 | | 272 | 20,834 |
| FOP | 36 | 30 | | 11 | 842 |
| PTO | 279 | 5 | | 14 | 1,073 |
| UDG | 384 | 55 | | 211 | 16,162 |
| TOTALS | 3,803 | | | 3,118 | 238,826 |

## MARKET ADJUSTMENTS

| TYPE | MDL | EFF. AREA | TOT ADJ PTS | EFF. BASE RATE | REPL. COST NEW | AYB | EYB | ECON | FNCT | | NORM | % COND |
|---|---|---|---|---|---|---|---|---|---|---|---|---|
| 0100 | 01 | 3,118 | 105.2160 | 117.84 | 367,425 | 1987 | 1987 | 0 | 0 | 0 | 35.00 | 65.00 |

1 SINGLE FAM 100% - 0 Heated Area: 2610 HX Base Yr

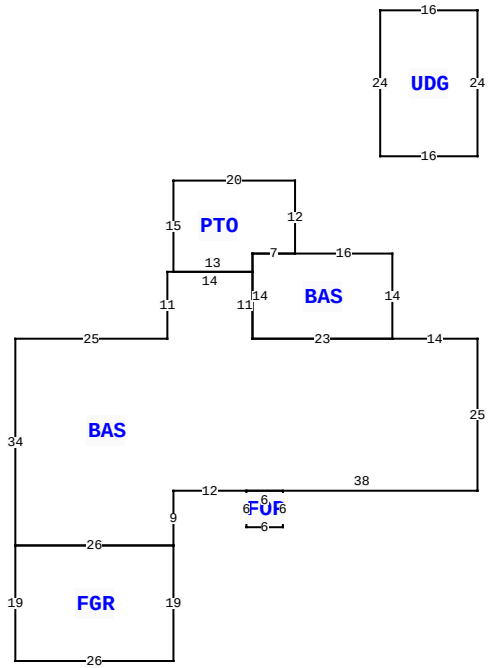


167 SW CONFEDERATE GLN, LAKE CITY

| | | | |
|---|---|---|---|
| BLD DATE | | LGL DATE | |
| XF DATE | | LAND DATE | |
| INC DATE | | AG DATE | |

## VALUATION SUMMARY

| | | |
|---|---|---|
| VALUATION BY | | STANDARD |
| Tax Group: 2 | Tax Dist: | |
| BUILDING MARKET VALUE | | 238,826 |
| TOTAL MARKET OB/XF VALUE | | 3,180 |
| TOTAL LAND VALUE - MARKET | | 65,260 |
| TOTAL MARKET VALUE | | 307,266 |
| SOH/AGL Deduction | | 119,953 |
| ASSESSED VALUE | | 187,313 |
| TOTAL EXEMPTION VALUE | HX HB | 50,722 |
| BASE TAXABLE VALUE | | 136,591 |
| TOTAL JUST VALUE | | 307,266 |
| NCON VALUE | | 0 |
| INCOME VALUE | | |
| PREVIOUS YEAR MKT VALUE | | 307,266 |

| PERMIT NUM | DESCRIPTION | AMT | ISSUED |
|---|---|---|---|
| 26882 | MAINT/ALTR | 50 | 03/27/2008 |
| 10200 | STORAGE | 85 | 09/15/1995 |

## SALES DATA

| OFF RECORD Number | DATE | TYPE INST | Q U | V I | RSN CD | SALE PRICE |
|---|---|---|---|---|---|---|
| 1545/79 | 6/26/2025 | WD | U | I | 11 | 100 |
| GRANTOR: PIERSOL JOHN R | | | | | | |
| GRANTEE: PIERSOL JOHN R AND | | | | | | |
| 0577/0112 | 9/01/1985 | AG | Q | V | | 11,000 |
| GRANTOR: DOUGLAS MARSHALL ETA | | | | | | |
| GRANTEE: PIERSOL JOHN & KATH | | | | | | |

## BUILDING NOTES

## BUILDING DIMENSIONS

BAS= W14 BAS= N14 W16 PTO= N12 W20 S15 E13 N3 E7$ W7 S14 E23$ W23 N11 W14 S11 W25 S34 FGR= S19 E26 N19 W26$ E26 N9 E12 FOP= S6 E6 N6 W6$ E38 N25$ PTR= N30 UDG= N24 W16 S24 E16$ S30$.

## EXTRA FEATURES

| LN | OB/XF CODE | DESCRIPTION | BLD | CAP | L | W | UNITS | UT | Adj R | ADJ UNIT PRICE | ORIG COND | YEAR ON | YEAR ACTUAL | Q | % COND | OB/XF MKT VALUE | NOTES |
|---|---|---|---|---|---|---|---|---|---|---|---|---|---|---|---|---|---|
| 1 | 0166 | CONC,PAVMT | 0 | 100 | 0 | 0 | 1.00 | UT | 0.00 | 0.00 | 100 | 0 | 0 | 3 | 100 | 1,180 | |
| 2 | 0180 | FPLC 1STRY | 0 | 100 | 0 | 0 | 1.00 | UT | 2,000.00 | 2,000.00 | 100 | 0 | 0 | 3 | 100 | 2,000 | |

## LAND DESCRIPTION

TOTAL OB/XF 3,180

| LN | USE CODE | CLS | LAND USE DESCRIPTION | CAP | RD | LOC ZONE | FRONT | DEPTH | TOT LND UTS | UNIT TYPE | DT | DPTH FACT | % COND | TOT ADJ | UNIT PRICE | ADJ UNIT PRICE | LAND VALUE | OTHER ADJUSTMENTS AND NOTES | YEAR | DENSITY | DECL | FRZ | YR | CONSRV |
|---|---|---|---|---|---|---|---|---|---|---|---|---|---|---|---|---|---|---|---|---|---|---|---|---|
| 1 | 0100 | C | SFR | 100 | | RSF-1 | 0.00 | 0.00 | 2.51 | AC | | 1.00 | 1.00 | 1.00 | 26,000.00 | 26,000.00 | 65,260 | | | | | | | |

REVIEW DATE 11/03/2023 BY JB Total Acres: 2.51 Total Land Value: 65,260 Market: 0 Agricultural: 0 Common: 65,260 PRINTED 11/17/2025 BY SYS