COMM NE COR OF SEC, RUN W
1632.97 FT TO A PT WHICH LIES
11 FT W OF NE COR OF LOT 1

LANDAU VICTOR M
203 SW LOCKHEED LN
LAKE CITY, FL 32025

**2026**

**12-4S-16-02935-109**

## COLUMBIA COUNTY PROPERTY



## BUILDING CHARACTERISTICS

| ELEMENT | CD | CONSTRUCTION |
|---|---|---|
| Exterior Wall | 31 | VINYL SID 100 |
| Roof Structur | 03 | GABLE/HIP 100 |
| Roof Cover | 03 | COMP SHNGL 100 |
| Interior Wall | 05 | DRYWALL 100 |
| Interior Floo | 14 | CARPET 90 |
| Interior Floo | 15 | HARDTILE 10 |
| Air Condition | 03 | CENTRAL 100 |
| Heating Type | 04 | AIR DUCTED 100 |
| Bedrooms | | 1 100 |
| Bathrooms | | 2 100 |
| Frame | 01 | NONE 100 |
| Stories | 1.5 | 1.5 100 |
| Architectual | 05 | CONV 100 |
| Units | | 0 100 |
| Condition Adj | 03 | 03 100 |
| Kitchen Adjus | 01 | 01 100 |
| Quality | 05 | 05 |
| DOR CODE | 0100 | SINGLE FAMILY |
| MAP NUM | | MKT AREA 06 |
| NEIGHBORHOOD/LOC | 12416.020 | 1.00/ |

| AREA TYPE | TOTAL GROSS AREA | PCT OF BASE | YEAR | TOT ADJ AREA | SUBAREA MARKET VALUE |
|---|---|---|---|---|---|
| BAS | 1,000 | 100 | | 1,000 | 77,630 |
| FOP | 224 | 30 | | 67 | 5,201 |
| FOP | 224 | 30 | | 67 | 5,201 |
| FUS | 1,000 | 100 | | 1,000 | 77,630 |
| HGR | 2,600 | 45 | | 1,170 | 90,826 |
| UDG | 834 | 55 | | 459 | 35,632 |
| TOTALS | 5,882 | | | 3,763 | 292,120 |

## MARKET ADJUSTMENTS

| TYPE | MDL | EFF. AREA | TOT ADJ PTS | EFF. BASE RATE | REPL. COST NEW | AYB | EYB | ECON | FNCT | | NORM | % COND |
|---|---|---|---|---|---|---|---|---|---|---|---|---|
| 0100 | 01 | 3,763 | 106.6328 | 119.43 | 449,415 | 1996 | 1996 | 0 | 0 | 0 | 35.00 | 65.00 |

1 SINGLE FAM 100% - 1997 Heated Area: 2000 HX Base Yr 1997

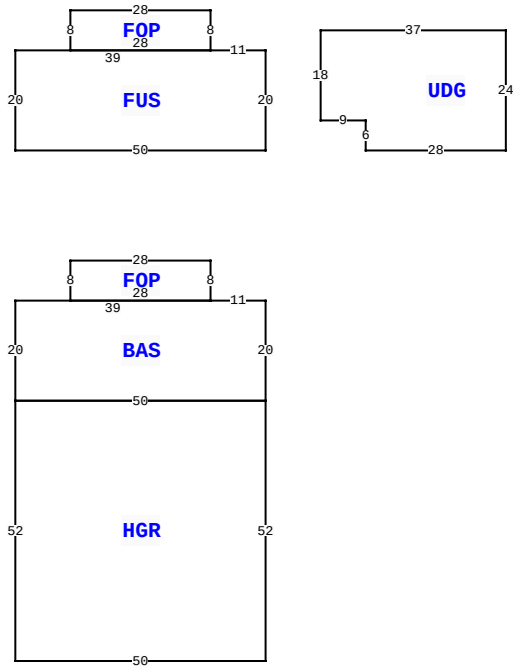


203 SW LOCKHEED LN, LAKE CITY

| | | | |
|---|---|---|---|
| BLD DATE | | LGL DATE | |
| XF DATE | | LAND DATE | |
| INC DATE | | AG DATE | |

## VALUATION SUMMARY

| | | |
|---|---|---|
| VALUATION BY | | STANDARD |
| Tax Group: 2 | Tax Dist: | |
| BUILDING MARKET VALUE | | 292,120 |
| TOTAL MARKET OB/XF VALUE | | 7,194 |
| TOTAL LAND VALUE - MARKET | | 57,000 |
| TOTAL MARKET VALUE | | 356,314 |
| SOH/AGL Deduction | | 82,581 |
| ASSESSED VALUE | | 273,733 |
| TOTAL EXEMPTION VALUE | HX HB | 50,722 |
| BASE TAXABLE VALUE | | 223,011 |
| TOTAL JUST VALUE | | 356,314 |
| NCON VALUE | | 0 |
| INCOME VALUE | | |
| PREVIOUS YEAR MKT VALUE | | 356,314 |

SALE:1:1: 1.14 AC SPLIT FROM 02935-101, PAID TOO M

| PERMIT NUM | DESCRIPTION | AMT | ISSUED |
|---|---|---|---|
| 18056 | GARAGE | 163 | 03/14/2001 |
| 10931 | SFR | 325 | 03/25/1996 |

## SALES DATA

| OFF RECORD Number | DATE | TYPE INST | Q U | V I | RSN CD | SALE PRICE |
|---|---|---|---|---|---|---|
| 0996/0038 | 9/24/2003 | WD | Q | I | 03 | 35,000 |
| GRANTOR: LAURA J KELLER | | | | | | |
| GRANTEE: VICTOR M LANDAU | | | | | | |
| 0810/2298 | 9/16/1995 | WD | Q | V | | 39,500 |
| GRANTOR: RAYMOND SESSIONS | | | | | | |
| GRANTEE: VICTOR LANDAU | | | | | | |

## BUILDING NOTES

## BUILDING DIMENSIONS

BAS= W11 FOP= N8 W28 S8 E28$W39 S20 E50HGR= W50 S52 E50 N52$ N20$ PTR= N30 FUS= N20 W11 FOP= N8 W28 S8 E28$ W39 S20 E50$ S30$ PTR= N30 E20 UDG= E28 N24 W37 S18 E9 S6$ S30 W20$.

## EXTRA FEATURES

| LN | OB/XF CODE | DESCRIPTION | BLD | CAP | L | W | UNITS | UT | Adj R | ADJ UNIT PRICE | ORIG COND | YEAR ON | YEAR ACTUAL | Q | % COND | OB/XF MKT VALUE | NOTES |
|---|---|---|---|---|---|---|---|---|---|---|---|---|---|---|---|---|---|
| 1 | 0166 | CONC,PAVMT | 0 | 100 | 0 | 0 | 4,796.00 | UT | 1.50 | 1.50 | 100 | 1996 | 1996 | 3 | 100 | 7,194 | |

## LAND DESCRIPTION

TOTAL OB/XF 7,194

| LN | USE CODE | CLS | LAND USE DESCRIPTION | CAP | RD | LOC ZONE | FRONT | DEPTH | TOT LND UTS | UNIT TYPE | DT | DPTH FACT | % COND | TOT ADJ | UNIT PRICE | ADJ UNIT PRICE | LAND VALUE | OTHER ADJUSTMENTS AND NOTES | YEAR | DENSITY | DECL | FRZ | YR | CONSRV |
|---|---|---|---|---|---|---|---|---|---|---|---|---|---|---|---|---|---|---|---|---|---|---|---|---|
| 1 | 0100 | C | SFR | 100 | | 00 | 0.00 | 0.00 | 1.14 | AC | | 1.00 | 1.00 | 1.00 | 50,000.00 | 50,000.00 | 57,000 | | | | | | | |

REVIEW DATE 11/03/2023 BY KS Total Acres: 1.14 Total Land Value: 57,000 Market: 0 Agricultural: 0 Common: 57,000 PRINTED 11/17/2025 BY SYS