COMM SE COR OF SW1/4, RUN N 1985
W 1324.32 FT, CONT W 662.39 FT F
CONT W 166.04 FT, N 661.35 FT, E

GONZALEZ BALDOMERO JR/GONZALEZ JANICE ELAINE
499 SW GALLANT LN
LAKE CITY, FL 32024

2026

12-4S-15-00350-003

COLUMBIA COUNTY PROPERTY

BUILDING CHARACTERISTICS

ELEMENT	CD	CONSTRUCTION
Exterior Wall	19	COMMON BRK 90
Exterior Wall	31	VINYL SID 10
Roof Structur	03	GABLE/HIP 100
Roof Cover	03	COMP SHNGL 100
Interior Wall	05	DRYWALL 100
Interior Floo	14	CARPET 90
Interior Floo	12	HARDWOOD 10
Air Condition	03	CENTRAL 100
Heating Type	04	AIR DUCTED 100
Bedrooms		3 100
Bathrooms		2 100
Frame	02	WOOD FRAME 100
Stories	1.	1. 100
Architectual	05	CONV 100
Units		0 100
Condition Adj	03	03 100
Kitchen Adjus	01	01 100
Quality	06	06
DOR CODE	0100	SINGLE FAMILY
MAP NUM		MKT AREA 01
NEIGHBORHOOD/LOC	12415.00	1.00/

AREA TYPE	TOTAL GROSS AREA	PCT OF BASE	YEAR	TOT ADJ AREA	SUBAREA MARKET VALUE
BAS	2,102	100		2,102	212,429
FDG	1,430	60		858	86,710
FGR	600	55		330	33,350
FOP	220	30		66	6,670
FSP	286	40		114	11,521
TOTALS	4,638			3,470	350,679

MARKET ADJUSTMENTS

TYPE	MDL	EFF. AREA	TOT ADJ PTS	EFF. BASE RATE	REPL. COST NEW	AYB	EYB	ECON	FNCT		NORM	% COND
0100	01	3,470	113.5008	127.12	441,106	2005	2005	0	0	0	20.50	79.50

1 SINGLE FAM 100% - 2006 Heated Area: 2102 HX Base Yr 2006

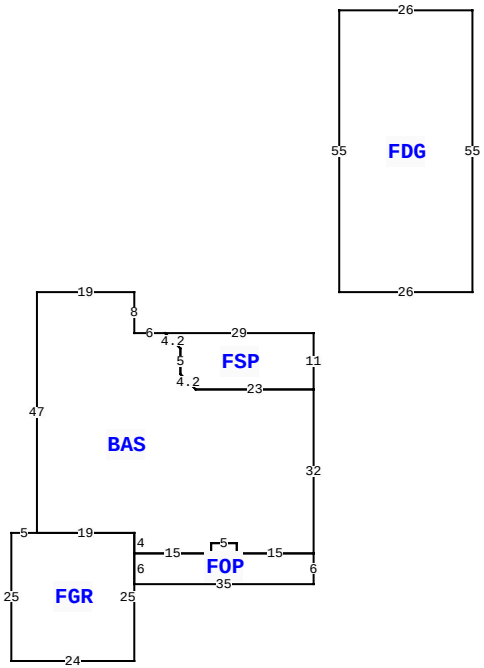

499 SW GALLANT LN, LAKE CITY

BLD DATE		LGL DATE	
XF DATE		LAND DATE	04/07/2025 MLU
INC DATE		AG DATE	

VALUATION SUMMARY

VALUATION BY		STANDARD
Tax Group: 3	Tax Dist:	
BUILDING MARKET VALUE		350,679
TOTAL MARKET OB/XF VALUE		4,563
TOTAL LAND VALUE - MARKET		45,360
TOTAL MARKET VALUE		400,602
SOH/AGL Deduction		137,183
ASSESSED VALUE		263,419
TOTAL EXEMPTION VALUE	HX HB SX	100,722
BASE TAXABLE VALUE		162,697
TOTAL JUST VALUE		400,602
NCON VALUE		0
INCOME VALUE		
PREVIOUS YEAR MKT VALUE		405,102

PERMIT NUM	DESCRIPTION	AMT	ISSUED
000048620	Roof Replacement	19,000	11/09/2023
22154	SFR	590	08/04/2004
21674	GARAGE	295	04/01/2004

SALES DATA

OFF RECORD Number	DATE	TYPE INST	Q / U	V / I	RSN CD	SALE PRICE
0956/2560	6/28/2002	WD	Q	V		25,000
GRANTOR: VERONICA KELLY						
GRANTEE: BALDOMERO & JANICE						
0893/2560	12/21/1999	WD	Q	V		25,000
GRANTOR: DUNN'S						
GRANTEE: V KELLY (VALIDITY I						

BUILDING NOTES

BUILDING DIMENSIONS

BAS=[ORIG=0,0] W19 S47 E19 S4 E15 N2 E5 S2 E15 N32 W23 U3L3 N5 U3L3 W6 N8 $
FDG=[ORIG=40,0] E26 N55 W26 S55 $
FGR=[ORIG=-19,47] W5 S25 E24 N25 W19 $
FSP=[ORIG=35,19] N11 W29 D3R3 S5 D3R3 E23 $
FOP=[ORIG=0,51] S6 E35 N6 W15 N2 W5 S2 W15 $
.

EXTRA FEATURES

L N	OB/XF CODE	DESCRIPTION	BLD	CAP	L	W	UNITS	UT	Adj R	ADJ UNIT PRICE	ORIG COND	YEAR ON	YEAR ACTUAL	Q	% COND	OB/XF MKT VALUE	NOTES
1	0166	CONC,PAVMT	0	100	0	0	1,825.00	UT	2.50	2.50	100	2005	2005	3	100	4,563	

LAND DESCRIPTION

TOTAL OB/XF 4,563

L N	USE CODE	CLS	LAND USE DESCRIPTION	CAP	R D	LOC ZONE	FRONT	DEPTH	TOT LND UTS	UNIT TYPE	D T	DPTH FACT	% COND	TOT ADJ	UNIT PRICE	ADJ UNIT PRICE	LAND VALUE	OTHER ADJUSTMENTS AND NOTES	YEAR	DENSITY	DECL	FRZ	YR	CONSRV
1	0100	C	SFR	100		A-1	0.00	0.00	2.52	AC		1.00	1.00	1.00	18,000.00	18,000.00	45,360							

REVIEW DATE 02/20/2024 BY JS Total Acres: 2.52 Total Land Value: 45,360 Market: 0 Agricultural: 0 Common: 45,360 PRINTED 10/02/2025 BY SYS