COMM SW COR OF NE1/4, RUN E 44.5
E R/W JAFFUS ALLEN RD, RUN N ALO
FT, E 774.09 FT FOR POB, RUN N 1

PADGETT MICHELE D
4345 SW PINEMOUNT RD
LAKE CITY, FL 32024

2026

12-4S-15-00347-022

COLUMBIA COUNTY PROPERTY

BUILDING CHARACTERISTICS

ELEMENT	CD	CONSTRUCTION
Exterior Wall	31	VINYL SID 100
Roof Structur	08	IRREGULAR 100
Roof Cover	12	MODULAR MT 100
Interior Wall	05	DRYWALL 100
Interior Floo	14	CARPET 90
Interior Floo	15	HARDTILE 10
Air Condition	03	CENTRAL 100
Heating Type	04	AIR DUCTED 100
Bedrooms		3 100
Bathrooms		2 100
Frame	02	WOOD FRAME 100
Stories	1.5	1.5 100
Architectual	05	CONV 100
Units		0 100
Condition Adj	03	03 100
Kitchen Adjus	01	01 100
Quality	06	06
DOR CODE	5000	IMPROVED AG
MAP NUM		MKT AREA 01
NEIGHBORHOOD/LOC	12415.00	1.00/

AREA TYPE	TOTAL GROSS AREA	PCT OF BASE	YEAR	TOT ADJ AREA	SUBAREA MARKET VALUE
BAS	2,258	100		2,258	208,055
FGR	550	55		302	27,826
FOP	175	30		52	4,792
FOP	292	30		88	8,108
FUS	356	100		356	32,802
TOTALS	3,631			3,056	281,583

MARKET ADJUSTMENTS

TYPE	MDL	EFF. AREA	TOT ADJ PTS	EFF. BASE RATE	REPL. COST NEW	AYB	EYB	ECON	FNCT		NORM	% COND
0100	01	3,056	117.5298	131.63	402,261	2001	2001	0	0	0	30.00	70.00

1 SINGLE FAM 100% - 2002 Heated Area: 2614 HX Base Yr 2002

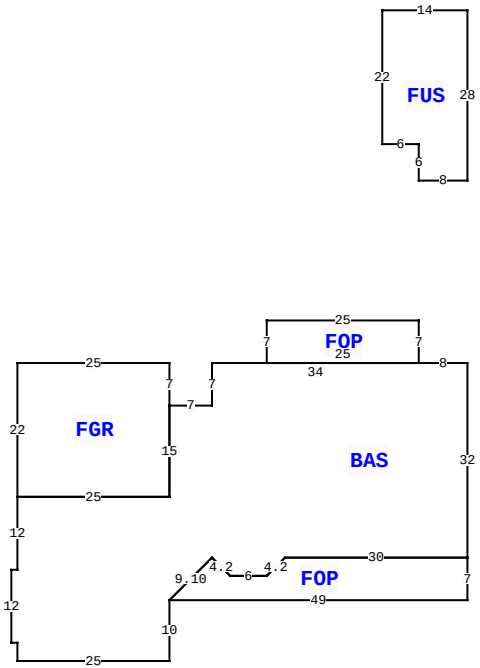

4345 SW PINEMOUNT RD, LAKE CITY

BLD DATE		LGL DATE	
XF DATE		LAND DATE	04/07/2025 MLU
INC DATE		AG DATE	

VALUATION SUMMARY

VALUATION BY		STANDARD
Tax Group: 3	Tax Dist:	
BUILDING MARKET VALUE		281,583
TOTAL MARKET OB/XF VALUE		6,504
TOTAL LAND VALUE - MARKET		90,270
TOTAL MARKET VALUE		299,615
SOH/AGL Deduction		76,802
ASSESSED VALUE		222,813
TOTAL EXEMPTION VALUE	HX HB	50,722
BASE TAXABLE VALUE		172,091
TOTAL JUST VALUE		378,357
NCON VALUE		0
INCOME VALUE		
PREVIOUS YEAR MKT VALUE		383,385

PERMIT NUM	DESCRIPTION	AMT	ISSUED
000049096	Roof Replacement	27,780	01/26/2024
17687	SFR	452	11/29/2000

SALES DATA

OFF RECORD Number	DATE	TYPE INST	Q U	V I	RSN CD	SALE PRICE
1321/0771	8/18/2016	WD	U	I	34	100
GRANTOR: JENNIFER A TAYLOR						
GRANTEE: MICHELE D PADGETT (						
0932/1865	8/04/2001	QC	Q	V	01	100
GRANTOR: VELMA PERRY						
GRANTEE: JANICE L FLATT(ASSI						

BUILDING NOTES

BUILDING DIMENSIONS

BAS=[ORIG=0,0] W8 W34 S7 W7 S15 W25 S12 W1 S12 E1 S3 E25 N10 U7R7 D3R3 E6 U3R3 E30 N32 $
FGR=[ORIG=-49,7] N7 W25 S22 E25 N15 $
FUS=[ORIG=0,-30] N28 W14 S22 E6 S6 E8 $
FOP=[ORIG=-49,39] E49 N7 W30 D3L3 W6 U3L3 D7L7 $
FOP=[ORIG=-8,0] N7 W25 S7 E25 $
.

EXTRA FEATURES

LN	OB/XF CODE	DESCRIPTION	BLD	CAP	L	W	UNITS	UT	Adj R	ADJ UNIT PRICE	ORIG COND	YEAR ON	YEAR ACTUAL	Q	% COND	OB/XF MKT VALUE	NOTES
1	0040	BARN,POLE	0	100	32	42	1,344.00	UT	3.50	3.50	100	2001	2001	3	100	4,704	
2	0296	SHED METAL	0	100	0	0	1.00	UT	0.00	0.00	100	2005	2005	3	100	1,200	
3	0166	CONC,PAVMT	0	100	0	0	1.00	UT	0.00	0.00	100	2005	2005	3	100	600	

LAND DESCRIPTION

TOTAL OB/XF 6,504

LN	USE CODE	CLS	LAND USE DESCRIPTION	CAP	RD	LOC ZONE	FRONT	DEPTH	TOT LND UTS	UNIT TYPE	DT	DPTH FACT	% COND	TOT ADJ	UNIT PRICE	ADJ UNIT PRICE	LAND VALUE	OTHER ADJUSTMENTS AND NOTES	YEAR	DENSITY	DECL	FRZ	YR	CONSRV
1	0100	C	SFR	100		A-1	0.00	0.00	1.00	AC		1.00	1.00	1.00	9,000.00	9,000.00	9,000							
2	6200	A	PASTURE 3	0		A-1	0.00	0.00	9.03	AC		1.00	1.00	1.00	280.00	280.00	2,528							
3	9910	M	MKT.VAL.AG	0		A-1	0.00	0.00	9.03	AC		1.00	1.00	1.00	9,000.00	9,000.00	81,270							

REVIEW DATE 03/01/2024 BY JS Total Acres: 10.03 Total Land Value: 11,528 Market: 81,270 Agricultural: 2,528 Common: 9,000 PRINTED 11/07/2025 BY SYS