LOT 1 BLOCK A OAKHAVEN S/D UNIT

851-2033, DC 1293-509,

BRANCH JUNE E
774 NW INDIAN SPRINGS DR
LAKE CITY, FL 32055

2026

12-3S-15-00167-201

COLUMBIA COUNTY PROPERTY

BUILDING CHARACTERISTICS

ELEMENT	CD	CONSTRUCTION
Exterior Wall	31	VINYL SID 100
Roof Structur	08	IRREGULAR 100
Roof Cover	03	COMP SHNGL 100
Interior Wall	05	DRYWALL 100
Interior Floo	14	CARPET 80
Interior Floo	15	HARDTILE 20
Air Condition	03	CENTRAL 100
Heating Type	04	AIR DUCTED 100
Bedrooms		3 100
Bathrooms		2.5 100
Frame	02	WOOD FRAME 100
Stories	1.	1. 100
Architectual	05	CONV 100
Units		0 100
Condition Adj	03	03 100
Kitchen Adjus	01	01 100
Quality	07	07
DOR CODE	0100	SINGLE FAMILY
MAP NUM		MKT AREA 01
NEIGHBORHOOD/LOC	12315.020	1.00/

AREA TYPE	TOTAL GROSS AREA	PCT OF BASE	YEAR	TOT ADJ AREA	SUBAREA MARKET VALUE
BAS	2,406	100		2,406	210,899
FGR	836	55		460	40,322
FOP	32	30		10	877
FOP	376	30		113	9,905
FSP	472	40		189	16,567
FST	27	55		15	1,315
UUS	366	50		183	16,041
TOTALS	4,515			3,376	295,925

MARKET ADJUSTMENTS

TYPE	MDL	EFF. AREA	TOT ADJ PTS	EFF. BASE RATE	REPL. COST NEW	AYB	EYB	ECON	FNCT		NORM	% COND
0100	01	3,376	115.9488	129.86	438,407	1999	1999	0	0	0	32.50	67.50

1 SINGLE FAM 100% - 2000 Heated Area: 2406 HX Base Yr 2000

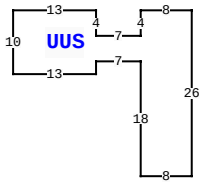

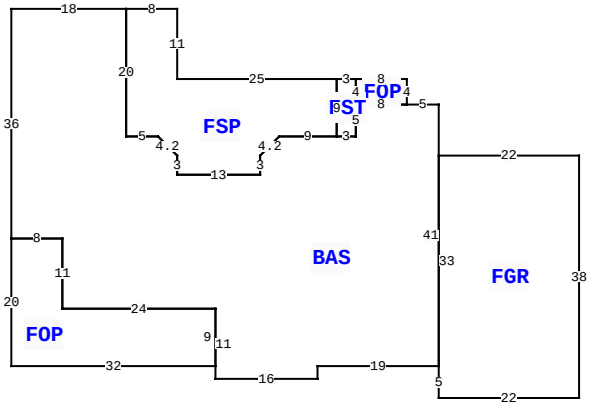

774 NW INDIAN SPRINGS DR, LAKE CITY

BLD DATE		LGL DATE	
XF DATE		LAND DATE	04/07/2025 MLU
INC DATE		AG DATE	

VALUATION SUMMARY

VALUATION BY		STANDARD
Tax Group: 3	Tax Dist:	
BUILDING MARKET VALUE		295,925
TOTAL MARKET OB/XF VALUE		19,046
TOTAL LAND VALUE - MARKET		55,000
TOTAL MARKET VALUE		369,971
SOH/AGL Deduction		115,629
ASSESSED VALUE		254,342
TOTAL EXEMPTION VALUE	HX HB WX	55,722
BASE TAXABLE VALUE		198,620
TOTAL JUST VALUE		369,971
NCON VALUE		0
INCOME VALUE		
PREVIOUS YEAR MKT VALUE		375,451

PERMIT NUM	DESCRIPTION	AMT	ISSUED
16362	POOL	115	12/03/1999
15179	SFR	385	03/08/1999

SALES DATA

OFF RECORD Number	DATE	TYPE INST	Q U	V I	RSN CD	SALE PRICE
0851/2033	1/09/1998	WD	Q	V		26,000

GRANTOR: ROBERTS LAND & TIMBER

GRANTEE: A E & JUNE BRANCH

EXTRA FEATURES

LN	OB/XF CODE	DESCRIPTION	BLD	CAP	L	W	UNITS	UT	Adj R	ADJ UNIT PRICE	ORIG COND	YEAR ON	YEAR ACTUAL	Q	% COND	OB/XF MKT VALUE	NOTES
1	0190	FPLC PF	0	100	0	0	1.00	UT	1,200.00	1,200.00	100	1999	1999	3	100	1,200	
2	0166	CONC,PAVMT	0	100	0	0	2,092.00	UT	1.50	1.50	100	1999	1999	3	100	3,138	
3	0280	POOL R/CON	0	100	13	25	325.00	UT	70.00	70.00	100	2000	2000	3	40	9,100	
4	0282	POOL ENCL	0	100	27	34	918.00	UT	15.00	15.00	100	2000	2000	3	40	5,508	
5	0169	FENCE/WOOD	0	100	0	0	1.00	UT	0.00	0.00	100	2016	2016	3	100	100	

BUILDING NOTES

BUILDING DIMENSIONS

BAS=[ORIG=0,0] W5 W8 S5 W3 W9 D3L3 S3 W13 N3 U3L3 W5 N20 W18 S36 E8 S11 E24 S11 E16 N2 E19 N41 $
FGR=[ORIG=0,41] S5 E22 N38 W22 S33 $
FSP=[ORIG=-16,5] N9 W25 N11 W8 S20 E5 D3R3 S3 E13 N3 U3R3 E9 $
FOP=[ORIG=-67,21] S20 E32 N9 W24 N11 W8 $
UUS=[ORIG=0,-30] N26 W8 S4 W7 N4 W13 S10 E13 N2 E7 S18 E8 $
FOP=[ORIG=-5,0] N4 W8 S4 E8 $
FST=[ORIG=-13,0] N4 W3 S9 E3 N5 $
.

LAND DESCRIPTION

TOTAL OB/XF 19,046

LN	USE CODE	CLS	LAND USE DESCRIPTION	CAP	RD	LOC ZONE	FRONT	DEPTH	TOT LND UTS	UNIT TYPE	DT	DPTH FACT	% COND	TOT ADJ	UNIT PRICE	ADJ UNIT PRICE	LAND VALUE	OTHER ADJUSTMENTS AND NOTES	YEAR	DENSITY	DECL	FRZ	YR	CONSRV
1	0100	C	SFR	100		RSF-1	0.00	0.00	1.00	LT		1.00	1.00	1.00	55,000.00	55,000.00	55,000							

REVIEW DATE 01/24/2023 BY KS Total Acres: 4.01 Total Land Value: 55,000 Market: 0 Agricultural: 0 Common: 55,000 PRINTED 10/02/2025 BY SYS